S

5323

Impeller type heat meters WFx5

Electronic, mains-independent impeller type meters to acquire heat or cooling energy consumption in autonomous heating, cooling or solar plants.

- **Nominal flow rate 0.6 m^3/h, 1.5 m^3/h or 2.5 m^3/h**
- **Optional communicating add-on modules**
- **No settling paths required**
- **Optional mounting position (horizontal or vertical)**
- **Setting of device-specific parameters on the meter itself in the field via buttons or operating and parameter setting software ACT50**
- **Optical interface**
- **Self-diagnostics**

Use

The electronic, mains-independent impeller type heat and cooling energy meter is of compact design and used for the physically correct acquisition of energy consumption. The meter consists of a flow measuring section, 2 ready connected temperature sensors and an integrated processor which – based on flow rate and temperature differential – calculates the energy consumption.
The meter is available for heat, combined heat/cooling or solar energy metering.

It is used primarily in plants with central production of heat or cooling energy, where the energy is supplied via zones to several individual consumers in a building. Such buildings include:

- multi-family houses
- office and administrative buildings

Typical users:

- Service and billing providers
- Housing industry and housing cooperatives
- Building service companies and real estate agencies

Restrictions

Temperature sensors and battery of the WFx5.. cannot be replaced.
The meter is not approved for use in drinking water systems.

Functions

Basic design

The meter comprises a flow and return temperature sensor and a flow sensor which is installed in a hot water or cooling circuit. A processor calculates continuously the temperature differential of flow and return and multiplies the value by the flow rate. The result (the current heat or cooling energy output) is cumulated, displayed and forwarded by an optional add-on module via radio or cable to a data processing system.
The processor is powered by a long-life battery which ensures 10 years of operation.

Impeller type measuring principle

The meter's flow sensor (volume meter) works accordingly to the single-jet impeller sensor principle. The water flow hits the impeller radially. The impeller's speed is scanned electronically. Incorrect direction of flow is detected and indicated on the display in the form of an error message.

Calculation of heat or cooling energy consumption

Using the acquired temperature differential of flow and return, the flow rate and the calculated thermal coefficient, the quantity of heat or cooling energy is shown on the display in physical units (kWh or MWh/MJ or GJ) following an internal calculation process. To increase measuring accuracy, the density and enthalpy values are determined for every measurement and included in the calculation.

Processor

The same standard processor with built-in service unit is used for all flow rates.

Infrared interface

Consumption meters with optical close-range interface must be read out on site. The meter is read out and parameterized with the WFZ.IRDA-USB optical reading head and the associated ACT50-heat software.

Reading parameters

The following parameters are read out via the optical close-range interface:

General remarks

- Serial number
- Mounting place
- Installation location
- Firmware version
- Medium
- Date of commissioning
- Remaining battery service life
- Article number
- Heat carrier
- Error date
- Error code

Device information

- Current temperature (flow return)
- Current temperature (supply flow)
- Current temperature (difference)
- Current energy flow
- Current flow rate
- Total flow rate
- Pulse value
- Device name

Meter statuses

- Current meter status
- Last due date
- Meter status on last due date
- Next due date
- Supply flow
    - Maximum temperature
    - Date of maximum temperature
    - Duration of upper deviations
- Return flow
    - Maximum temperature
    - Date of maximum temperature
    - Duration of upper deviations
- Flow
    - Maximum flow rate
    - Date of maximum flow rate
    - Duration of upper deviations
- Statistical values
    - 15 monthly values with date

Module interface

Every meter is equipped with a module interface. When the respective optional add-on module is fitted, the meter can be read out from a remote location.

Tampering

The meter is protected by a factory-fitted seal.

Function check

The temperature is acquired at 36-second intervals (optionally at 6-second intervals). The flow is acquired continuously. The amount of energy supplied is displayed in real time. Any errors are shown immediately.

Type summary

Features of the impeller type heat meters listed below:

Mounting location	Return
Design	Processor combined with flow measuring section
Rated pressure	PN 16
Sensor mounting	Return temperature sensor, integrated in the flow measuring section
Type of sensing element	Pt1000, Ø5.0 mm, length 45 mm
Temperature sensor cable length	1.5 m
Communication	IrDA and module interface
Threshold value for …	
- acquisition of heat	1.0 K
- acquisition of cooling energy	0.2 K
Due date	31.12. (December 31)
Display	kWh

Heat meters

Options	*Stock number*	*Product no.*
0.6 m^3/h nominal flow rate, mounting length 110 mm, connecting thread G ¾"	S55561-F177	WFM501-E000H0
1.5 m^3/h, nominal flow rate, mounting length 110 mm, connecting thread G ¾"	S55561-F178	WFM502-E000H0
2.5 m^3/h nominal flow rate, mounting length 130 mm, connecting thread G 1"	S55561-F179	WFM503-J000H0

Add-on modules

Description	*Stock number*	*Product no.*
AMR with integrated antenna	S55563-F132	WFZ56.OK
AMR with remote antenna	JXF:WFZ56.OF	WFZ56.OF
Walk-by with integrated antenna	S55563-F133	WFZ566.OK
Walk-by with remote antenna	JXF:WFZ566.OF	WFZ566.OF

Spacers and fittings

Description	*Stock number*	*Product no.*
Spacer G ¾", length 110 mm	JXF:WFZ.R110	WFZ.R110
Spacer G 1", length 130 mm	JXF:WFZ.R130	WFZ.R130
Mounting kit, consisting of: - 2 coupling nuts G ¾" x R ½" - 2 gaskets	JXF:WFZ.R2	WFZ.R2
Mounting kit, consisting of: - 2 coupling nuts G 1" x R ¾" - 2 gaskets	JXF:WFZ.R2-1	WFZ.R2-1

Mounting kits for screwed type meters

Description	*Stock number*	*Product no.*
Mounting kit, consisting of: - 1 spacer G ½", length 110 mm - 2 ball valves Rp ½" with cap nut G ¾" and flat seal - 1 ball valve Rp ½" for sensor Ø5.0x45 mm	JXF:WFZ.E110-I	WFZ.E110-I
Mounting kit, consisting of: - 1 spacer G ¾", length 110 mm - 2 ball valves Rp ½" with cap nut G ¾" and flat seal - 1 ball valve Rp ¾" for sensor Ø5.0x45 mm	JXF:WFZ.E110G3-I	WFZ.E110G3-I
Mounting kit, consisting of: - 1 spacer G 1", length 130 mm - 2 ball valves Rp ¾" with cap nut G 1" and flat seal - 1 ball valve Rp ¾" for sensor Ø5.0x45 mm	JXF:WFZ.E130-I	WFZ.E130-I
Mounting kit, consisting of: - 1 spacer G 1", length 130 mm - 2 ball valves Rp ¾" with cap nut G 1" and flat seal - 1 ball valve Rp 1" for sensor Ø5.0x45 mm	JXF:WFZ.E130G1-I	WFZ.E130G1-I

Mounting kits for screwed type meters with T-piece

Description	*Stock number*	*Product no.*
Mounting kit, consisting of: - 1 spacer G ¾", length 110 mm - 2 ball valves Rp ½" with cap nut G ¾"and flat seal - 1 T-piece Rp ½" for sensor Ø5.0x45 mm - 1 protection pocket DS M10x1 mm	JXF:WFZ.E110-IT	WFZ.E110-IT
Mounting kit, consisting of: - 1 spacer G ¾", length 110 mm - 2 ball valves Rp ½" with cap nut G ¾" and flat seal - 1 T-piece Rp ¾" for sensor Ø5.0x45 mm - 1 protection pocket DS M10x1 mm	JXF:WFZ.E110G3-IT	WFZ.E110G3-IT
Mounting kit, consisting of: - 1 spacer G 1", length 130 mm - 2 ball valves Rp ¾" with cap nut G 1" and flat seal - 1 T-piece Rp ¾" for sensor Ø5.0x45 mm - 1 protection pocket DS M10x1 mm	JXF:WFZ.E130-IT	WFZ.E130-IT
Mounting kit, consisting of: - 1 spacer G 1", length 130 mm - 2 ball valves Rp ¾" with cap nut G 1“ and flat seal - 1 T-piece Rp 1" for sensor Ø5.0x45 mm - 1 protection pocket DS M10x1 mm	JXF:WFZ.E130G1-IT	WFZ.E130G1-IT

T-pieces for the sensors

Description	*Stock number*	*Product no.*
T-piece Rp ½", incl. adapter for sensor mounting Ø5.0x45 mm	JXF:WFZ.T16	WFZ.T16
T-piece Rp ¾", incl. adapter for sensor mounting Ø5.0x45 mm	JXF:WFZ.T19	WFZ.T19
T-piece Rp 1", incl. adapter for sensor mounting Ø5.0x45 mm	JXF:WFZ.T22	WFZ.T22

Ball valves

Description	*Stock number*	*Product no.*
Ball valve Rp ½" for sensor Ø5.0x45 mm	JXF:WFZ.K15	WFZ.K15
Ball valve Rp ¾" for sensor Ø5.0x45 mm	JXF:WFZ.K18	WFZ.K18
Ball valve Rp 1" for sensor Ø5.0x45 mm	JXF:WFZ.K22	WFZ.K22
Ball valve Rp ½" with cap nut G ¾" for sensor Ø5.0x45 mm	JXF:WFZ.K16	WFZ.K16
Ball valve Rp ½" with cup nut G ¾"	JXF:WFZ.K17	WFZ.K17

Accessories

Description	*Stock number*	*Product no.*
Infrared read head with USB interface	JXF:WFZ.IRDA-USB	WFZ.IRDA-USB
Seal, wire length 250 mm	JXF:FNS0001	FNS0001

Software

Options	*Stock number*	*Product no.*
Parameterization and diagnostic software	JXF:ACT50-Heat	ACT50-Heat

Ordering

When ordering, please give quantity, description, product no. and stock number

Order numbers

Product no.	*Stock number*	*Description*
WFx5..	See product nos. under "Type summary"	Impeller type heat meters

Scope of delivery

The meters come complete with Operating and Installation Instructions in different languages including the required mounting material (gaskets, seals, etc.).

Languages

The Operating and Installation Instructions are supplied in 18 languages: Bulgarian, Croatian, Czech, Dutch, English, Finnish, French, German, Greek, Hungarian, Italian, Lithuanian, Norwegian, Polish, Slovakian, Slovenian, Spanish and Turkish.

Equipment combinations

The heat meters communicating via radio or wire are suited for use with the following components:

Description	*Type no.*	*Documentation*
Network node	WTT16.. WTX16..	N2874
Network node with gateway	WTX16.GSM WTX16.IP WTX16.MOD	N2878
Operating software network node	ACT26	J2870
Readout software network node	ACS26	N2870
Mobile data collector set	WTZ.WBSET-2/PC	N2885
Readout software mobile data collector	ACT46	N2885
M-bus central unit	OZW10	N5362
M-bus level converter	WZC-P60	N5382
M-bus level converter	WZC-S250	N5364
M-bus level converter	WZC-P250	N5365
M-bus repeater	WZC-R250	N5366
Operating software M-bus central unit	ACS790	N5649

Technology

Screwed type meter pressure drop characteristic 0.6 m³/h, 110 mm

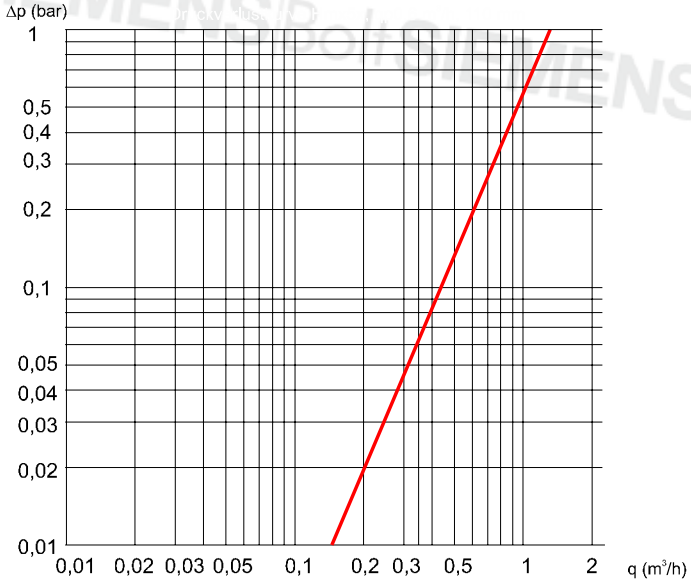

Screwed type meter pressure drop characteristic 1.5 m³/h, 110 mm

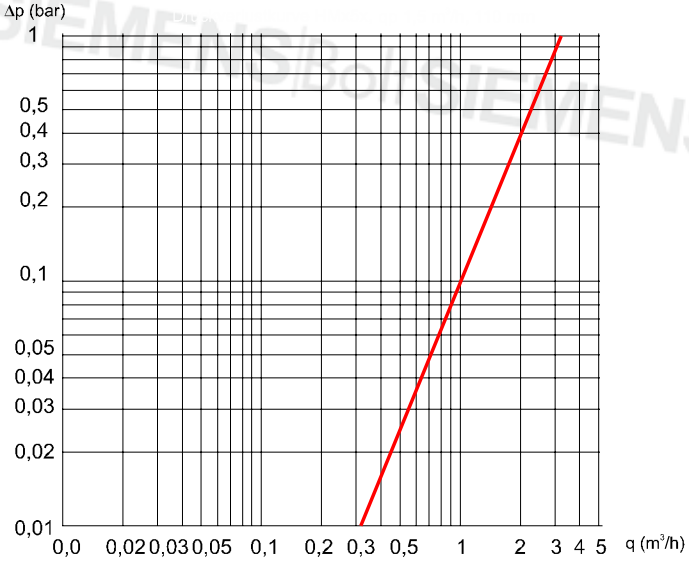

Screwed type meter pressure drop characteristic 2.5 m³/h, 130 mm

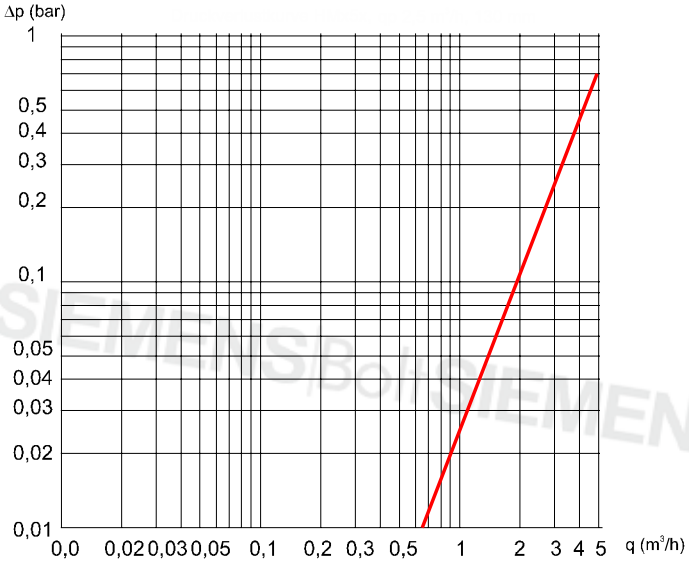

Standard parameters

The meters are supplied with the following parameter settings:

- Due date: 31.12. (December 31)
- Display of consumption in kWh

All display levels are shown.

The heat or cooling energy consumption values are continuously cumulated. The current state is stored at 24:00 o'clock on the due date.
Every time current and annual consumption are stored, the heat meter calculates a checksum. This can be read out together with the due date value and checked in the billing program. This allows incorrect display readouts to be detected. The stored due date value remains in place for one year.

Parameter settings via PC

On the meter, the following parameters can be set via the ACT50 software:

- Next due date
- User name and password for close-range interface
- Display of kWh or MWh/MJ or GJ
- Selection of levels to be displayed
- Display of meter readings with or without check number

In addition, with the meters featuring solar adaption:

- Proportion of glycol or brine

Parameter settings via the meter

Using the 2 buttons, the following parameters can be set directly on the meter:

- Next due date
- Display of kWh or MWh/MJ or GJ
- Selection of levels to be displayed
- Display of meter readings with or without check number

In addition, with meters featuring solar adaption:

- Proportion of glycol or brine

Communication

The meter is supplied complete with an optical close-range interface as standard.

Add-on modules

The following external communication modules are available:

- AMR RF module WFZ56.OK/WFZ56.OF
- Walk-by RF module WFZ566.OK/WFZ566.OF

To parameterize the RF add-on module, the ACT20 software can be used.

AMR RF module WFZ56.OK/WFZ56.OF

Function description

The meters are read out via radio with the help of the AMR add-on modules (WFZ56.OK and WFZ56.OF). They send cyclically the current consumption data to the network nodes. These collect automatically the data of all connected meters and store them. The customer can then read out all consumption data of a plant from a remote location.

The add-on module is available in 2 versions:

- WFZ56.OK with integrated antenna
- WFZ56.OF with external antenna

Reading parameters

The meter forwards the following parameters via radio:

- Device number (8 digits)
- Medium/software version
- Time of day/date
- Error state
- Error date
- Current consumption
- Date of due day
- Due day value
- 13 monthly values

Walk-by RF module
WFZ566.OK
WFZ566.OF

Function description

The meters are read out locally via radio with the help of the walk-by add-on modules (WFZ566.OK and WFZ566.OF). They forward the consumption data at preset times. Using the mobile data collector (WTZ.MB) and a PC with associated software, the person doing the reading collects the radio telegrams. To do this, there is no need to enter the user's apartment or office. In the case of smaller plants, the data can usually be collected from outside the building.

The add-on module is available in 2 versions:

- WFZ566.OK with integrated antenna
- WFZ566.OF with external antenna

The meter forwards the following parameters via radio:

- Device number (8 digits)
- Medium/software version
- Time of day/date
- Error state
- Error date
- Current consumption
- Date of due day
- Due day value
- 13 monthly valves

The RF add-on modules WFZ566.OF and WFZ566.OK come with the following settings:

- Type of readout
  - Annual = 48 readout days once per year after the due date
- Transmission period
  Setting of the time of day for the start or the end of the transmission of radio telegrams. The daily transmission period of the device is specific for 10 hours (default = 8:00 AM – 6:00 PM CET)

- Transmission delay (offset)
  Time delay of the transmission of telegrams after the due date or the start of the month in days (default = 0 days)
- Transmission-free days
  A maximum of 2 week days – selected from Friday, Saturday and Sunday – can be defined as transmission-free days. At least 1 weekday must be set (standard = Sunday)

Display

Type of processor

The LCD shows meter states, display units and consumption values on several levels.

The meter has 2 buttons to switch between the individual display steps and levels.

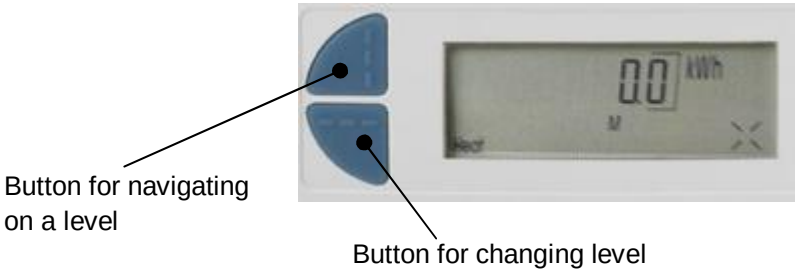

Operation

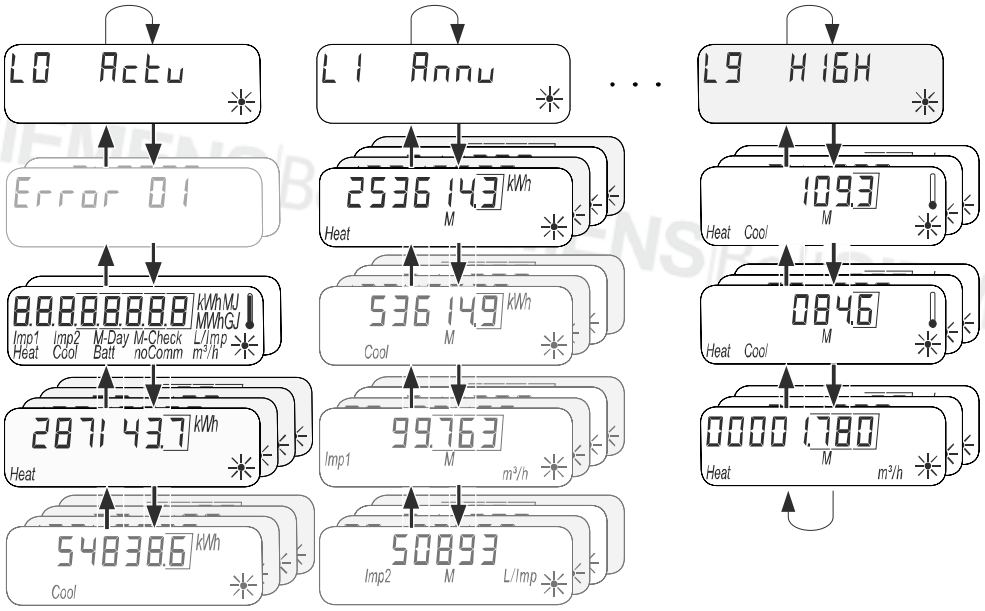

Quick reading mode

The meter's display is off during operation and activated only when a button is pressed. But it is switched on for a moment every 36 seconds to check the function (quick reading mode).

In quick reading mode, the following parameters are displayed (depending on the meter's configuration):

- Current meter reading heat
- Current meter reading cooling energy
- Meter reading heat on due date
- Meter reading cooling energy on due date (if available)
- Error code (only if error is pending)
- Error date
- Display "Incorrect direction of flow"

Display levels

The following levels are available:

- Standard levels:
  - L0 Current consumption values
  - L1 Annual consumption values

- The following levels can be deactivated individually:
  - L2 Current values
  - L3 Parameters
  - L5 Current values heat
  - L9 Maximum values

If an error message is pending, it is logged with the respective error code and the date the error occurred and shown on the display (alternating).

Level L0 Current consumption values

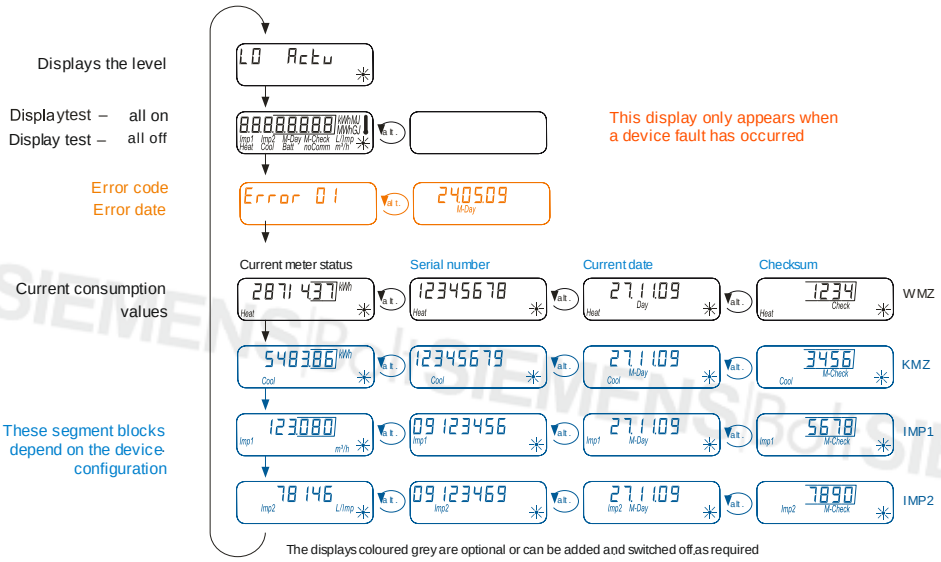

Level L1
Annual consumption values

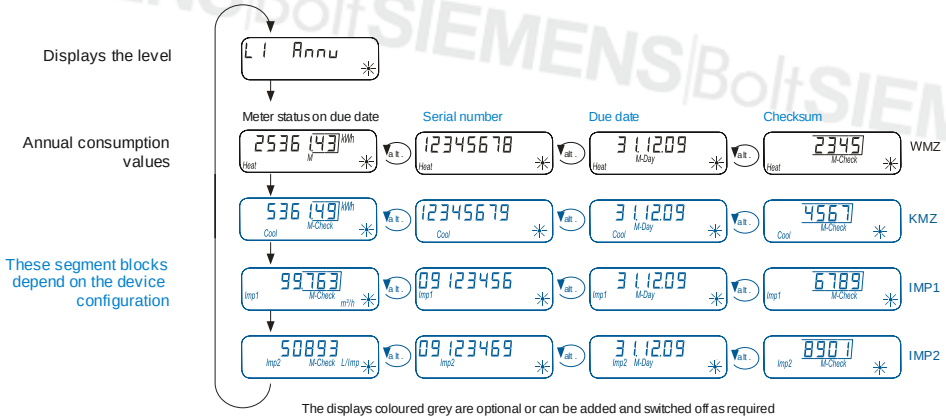

Level L2
Current values

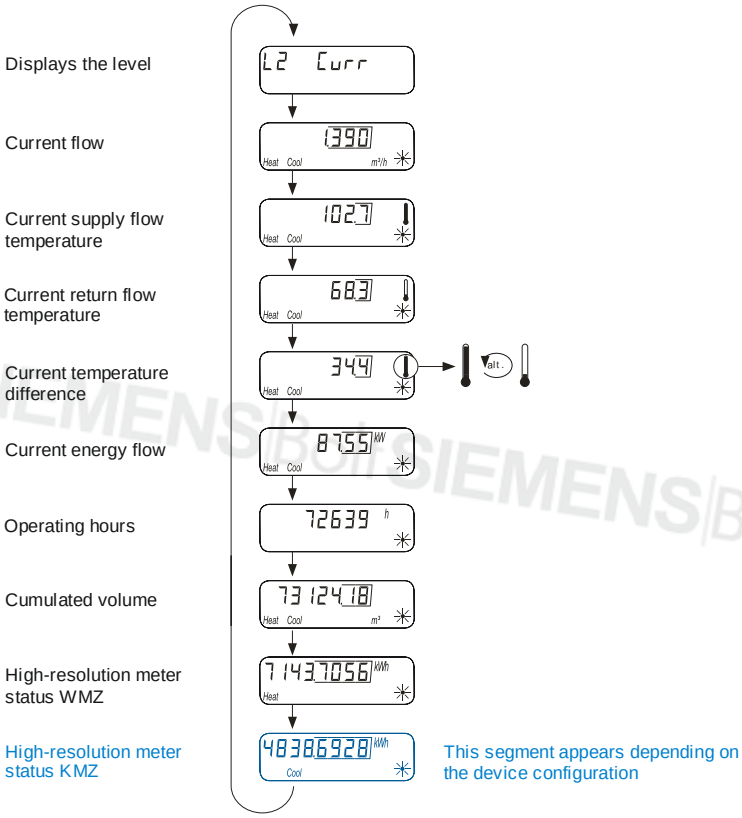

Level L3
Parameters

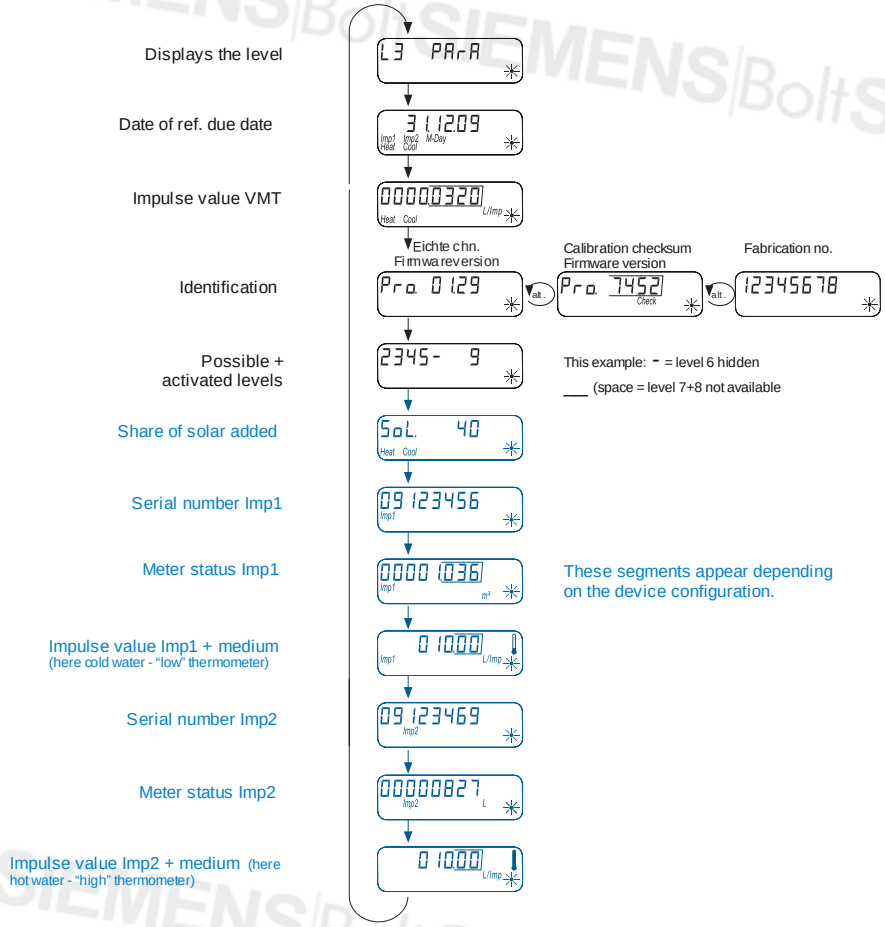

Level L5
Current values heat

This level is displayed only when the device is configured for heat metering.

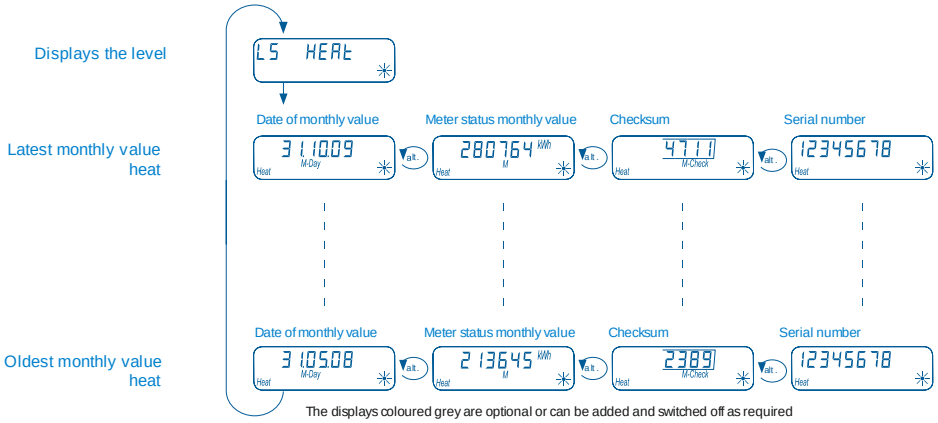

Level L9
Maximum values

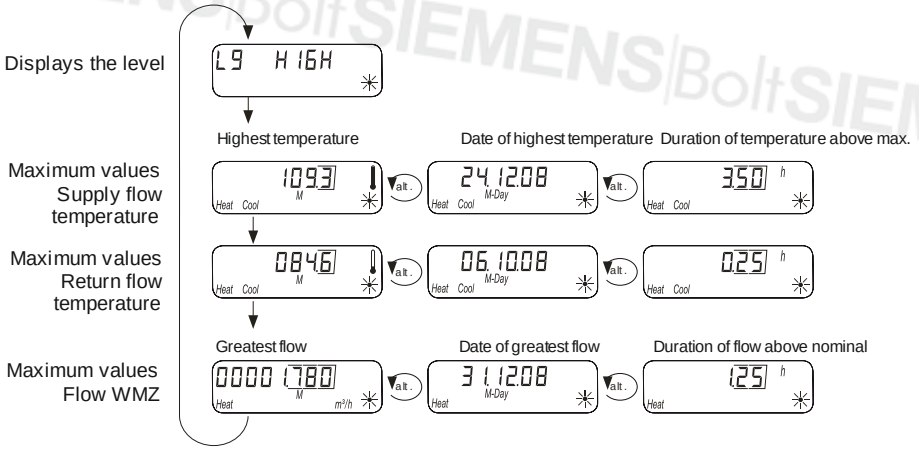

Error and status messages

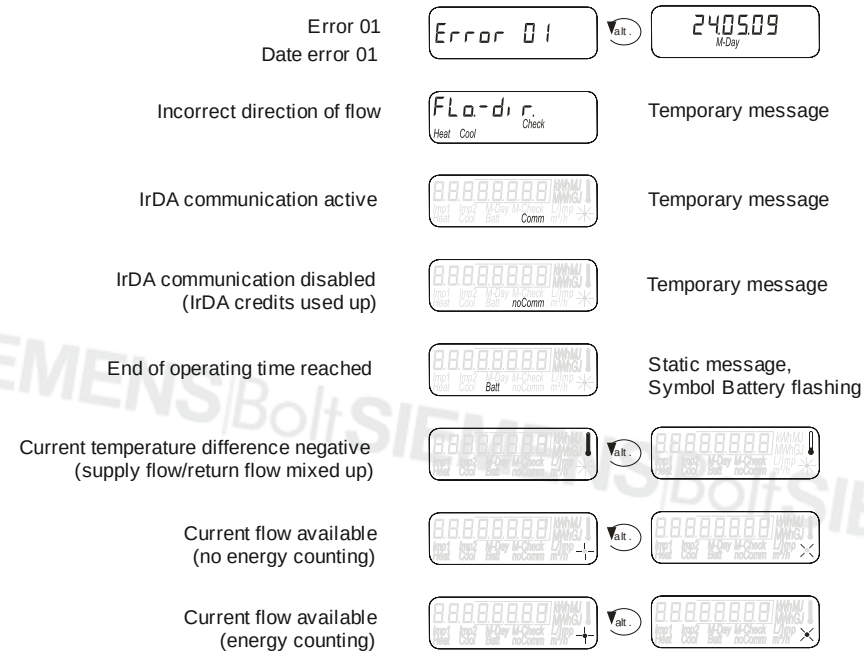

Mounting notes

Flow measuring section

The meter's mounting position is optional (with the exception of upside down). The mounting location (return or flow) depends on the type of meter. Settling paths are not required, neither upstream nor downstream from the meter. But if the meter is installed in the common return of 2 heating circuits (e.g. space heating and DHW), a certain distance to the joining T-piece (min. 10 × DN) must be observed to make certain the water is properly mixed.

Before installing the meter, the system must be thoroughly flushed.

The flow measuring section must be installed between 2 shutoff valves, and the arrow must agree with the direction of flow. The temperature sensors must be installed in the same water circuit as the flow measuring section (observe mixing). Depending on their design, the sensors can be fitted in T-pieces or ball valves, they can be directly immersed or fitted in immersion pockets (observe national regulations). In any case, the sensors' minimum immersion length must be such that their ends reach the pipe's center. Sensors and screwed connections must be sealed to prevent tampering.

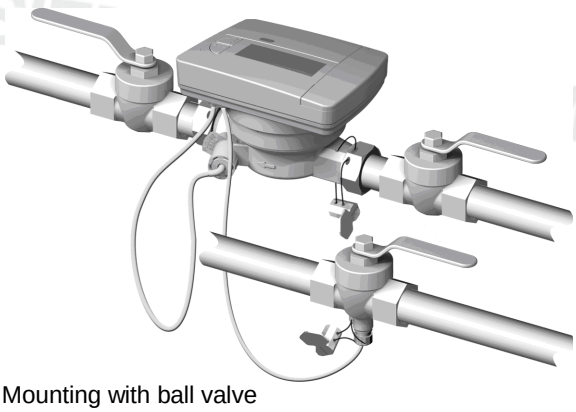

Mounting with ball valve

Processor

Basic design of processor:

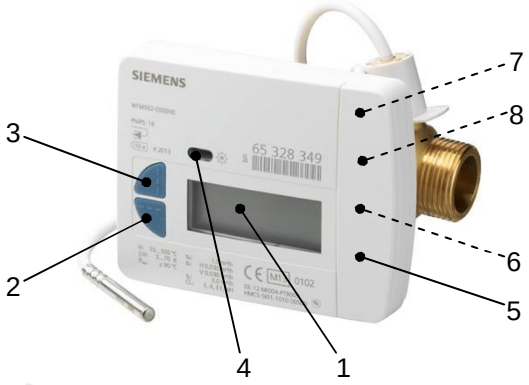

1 LCD
2 Button to change between the levels
3 Button to navigate on a level
4 IrDA interface
5 Interface cover
6 Module interface
7 Fixing holes for external add-on modules
8 User protection and slots for extend cable connections

The processor's ambient temperature of 55 °C must be observed. Direct solar radiation must be avoided.
Depending on the version (compact or removable meter), the processor can be removed from the flow measuring section to be fitted on the wall with the mounting bracket at a distance of 40 cm.

Add-on modules

The external add-on module (WFZ..) can be fitted to any meter. To do this, proceed as follows:

a) Remove interface cover from the meter
b) Fit add-on module and secure it

Shortly after fitting, the add-on module identifies automatically the type of meter and makes the required alignment (series number, monthly values, due day, current value and type of medium). The modules are parameterized with the ACT20 software.
Wireless operation is activated via the WFZ-PS radio telegram tool or the ACT20 software.

The modules do not affect the acquisition of consumption data and, for this reason, can be retrofitted at any time **without damaging the seal**.

Sealing

After mounting the meter, all components must be sealed to prevent tampering (observe national regulations):

- Flow measuring section with fitting (inlet)
- Flow temperature sensor with ball valve or immersion pocket with pipe
- And, if required, the module with the processor.

Maintenance notes

Maintenance

The meters are maintenance-free.
Observe national calibration regulations.

Disposal

In terms of disposal, the meters and the different partner devices are classified as electronic scrap conforming to the European directive 2002/96/EU (WEE) and must not be disposed of as domestic waste. The relevant national legal regulations must be complied with and the products must be disposed of via the appropriate channels. Local, currently valid legislation must be observed. Exhausted batteries must be disposed of through the specified collection points.

Warranty service

User-related technical data are only guaranteed in connection with the products listed in this data sheet.
If the meter is used in connection with 3rd-party devices not explicitly mentioned, correct functioning must be guaranteed by the user. In such cases, Siemens does not provide any field or warranty services.

Technical data

Processor						
Power supply	Batterie type		Lithium battery CR AA (cannot be replaced)			
	Battery voltage		3.0 V			
	Battery life		10 years with backup			
Function data	Measuring range					
	- Heat meter		10...90 °C			
	- Heat and cooling energy meter		5...90 °C			
	Differential temperature range ΔΘ		3...70 K			
	Threshold value					
	- Heat		1.0 K			
	- Cooling energy		0.2 K			
	Thermal coefficient		Shifting-compensated			
Temperature sensor	Sensing element		Pt1000 as per EN 60751			
	Type		DS (direct short)			
	Diameter		Ø 5.0 x 45 mm (standard)			
	Cable length		1.5 m (standard, 3 m optional)			
Display	Display		8-digit LCD + pictograms			
	Energy display		kWh Optional: MWh/MJ/GJ			
Communication	Optical interface					
	- Design		Similar to EN 62056-21			
	- Protocol		As per EN 13757-2 / -3			
Flow measuring section impeller type meter	Temperature range (national approvals may differ)		10...90 °C			
	Max. temperature $t_{max.}$		90 °C			
	Rated pressure		1.6 MPa (PN 16)			
	Rated flow q_p	m^3/h	**0.6**	**1.5**	**1.5**	**2.5**
	Mounting length	mm	110	80	110	130
	Connecting thread		G ¾ B"	G ¾ B"	G ¾ B"	G 1 B"
	Metrological class					
	- Horizontal		1:50	1:50	1:50	1:50
	- Vertical		1:25	1:50	1:50	1:50
	Max. flow rate q_s	m^3/h	1.2	3.0	3.0	5.0
	Min. flow rate q_i					
	- Horizontal	l/h	12	30	30	50
	- Vertical	l/h	24	30	30	50
	Response threshold	l/h	3...4	4...5	4...5	6...7
	Pressure drop at qp					
	Mounting length 80 mm Δp	mbar		200		
	Mounting length 110 mm Δp	mbar	200		200	
	Mounting length 130 mm Δp	mbar				180
	Flow rate at Δp = 1 bar, k_v	m^3/h	1.5	3.2	3.2	5.3
	Mounting position			Horizontal/vertical		

Communication

- AMR add-on module WFZ16.OK/WFZ16.OF	RF AMR	
	- Battery type	Lithium battery CR 2/3 AA
	- Battery voltage	DC 3.0 V
	- Battery life	>11 years
	- Frequency	868.0...868.6 MHz
	- Norms	Data transmission as per EN 13757-4 Immunity as per EN 301 489-1/-3 Emissions as per EN 300 220-2 Safety of equipment of IT EN 60950-1
	- Transmission power (typically)	5 dBm
	- Degree of protection	IP54
	- Safety class	III
- Walk-by-add-on module WFZ166.OK/WFZ166.OF	RF walk-by	
	- Battery type	Lithium battery CR 2/3 AA
	- Battery voltage	DC 3.0 V
	- Battery life	>11 years
	- Frequency	868.0...868.6 MHz
	- Norms	Data transmission as per EN 13757-4 Immunity as per EN 301 489-1/-3 Emissions as per EN 300 220-2 Safety of equipment of IT EN 60950-1
	- Transmission power (typically)	5 dBm
	- Degree of protection	IP54
	- Safety class	III

Protection of housing	Safety class	III
	Degree of protection	
	- Processor	IP65
	- Flow measuring section	IP65 as per EN 60529

Ambient conditions

	Operation EN 60721-3-3	**Transport** EN 60721-3-2	**Storage** EN 60721-3-1
Climatic conditions	Class A	Class A	Class A
Temperature	5...55 °C	-20...60 °C	-20...60 °C
Humidity	<93% r.h. at 25 °C (non-condens-ing)	<93% r.h. at 25 °C (non-condens-ing)	<93% r.h. at 25 °C (non-condens-ing)
Mechanical conditions	Class M2	Class M2	Class M2
Max. altitude	Min. 700 hPa (corresponding to max. 2000 m above sea level)		

Norms and standards	CE conformity to	
	- EMC directive	2004/108/EG
	- Immunity and emissions	- EN 61000-6-2 - EN 61000-6-3 (suited for residential or light iIndustrial use) - EN 1434-4 Environment class A - 2004/22/EG Electromagnetic class E1

	- MID directive	2004/22/EG (measuring instruments) Mechanical class M2 Electromagnetic class E1
	- Quality of heating medium	VDI guideline 2035
	- Type approval as per	- EN 1434-4 Environment class A measuring accuracy class 3
	Produkt standard	DIN EN 1434-1 (heat meters)
Environmental compatibility	Environment Declaration CE1E5323en contains data about environmentally friendly product design and evaluation (RoHS conformity, substances used, packaging, environmental benefits, disposal) See online catalog	ISO 14001 (environment) ISO 9001 (quality) RoHS directive 2002/95/EC
Dimensions	(W x H x D): - Processor - Flow measuring section	 101.5 x 78 mm See "Dimensions"
Housing material	Processor	PC-ABS PC-LEXAN
Housing colors	Processor	RAL 9016
Weight	Meter packed complete with accessories	0.6 m^3/h: 928 g 1.5 m^3/h: 915 g 2.5 m^3/h: 1014 g

Dimensions

Screwed type meter

Dimensions in mm

Mounting length 80 mm

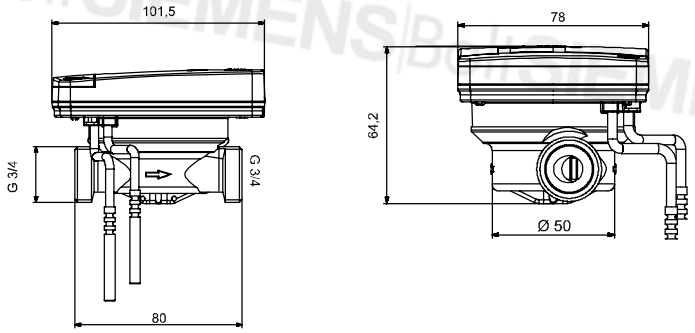

Mounting length 110 mm

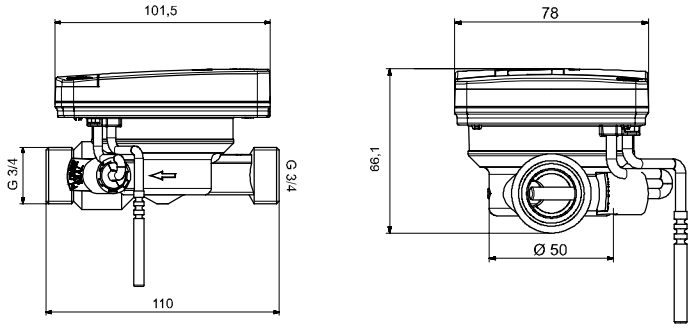

Mounting length 130 mm

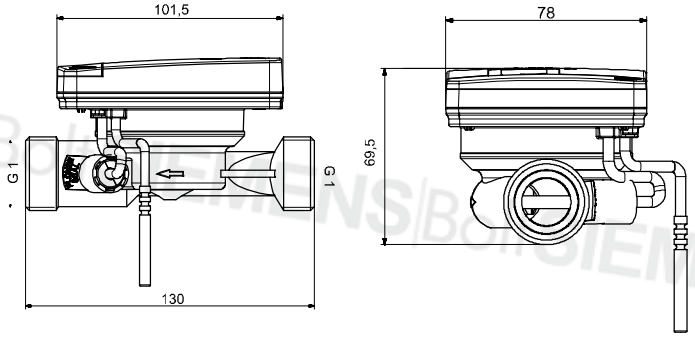

RF add-on module

Dimensions in mm

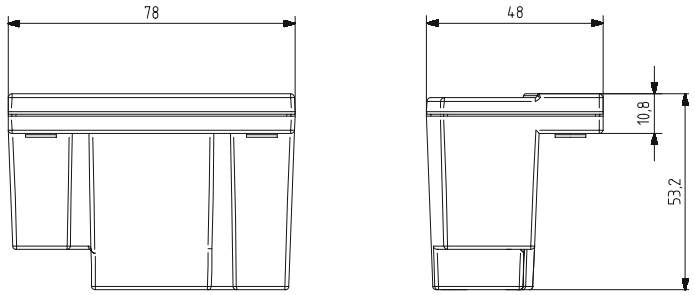

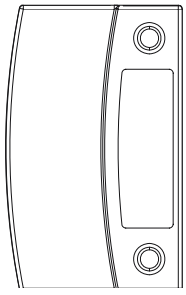

© 2013 Siemens Switzerland Ltd.