Safety Limit Thermostats

RAK-ST..M
RAK-ST..M..

Electromechanical STB according to DIN EN 14597

- **Safety temperature limitation, with single-pole changeover microswitch**
- **Switching capacity contact connection 11-12 16 (2.5) A, AC 250 V**
  Terminal for alarm contact connection 11-13 2 (0.4) A, AC 250 V
- **Time constant conforming to DIN EN 14597**
- **3 mounting choices: pipe, pocket or wall mounting**
- **Switch-off temperature can be checked through the viewing window in the housing**
- **Compensation of ambient temperature at switching mechanism and capillary tube**
- **Fail-safe design, rupture of the capillary tube causes contact connection 11-12 to open**
- **Internal reset facility covered by removable threaded nipple**
- **IP43 or IP65 protection class**
- **Push-in terminals for fast installation**

Use

Typical applications:

- Fire protection thermostat in duct systems
- Heat generation plant
- For general use in heating, ventilation and air conditioning plant

Function

When the limit temperature is reached on rising medium temperature, contact 11-12 changes over to contact 11-13 (alarm) and the limiter remains tripped in this position. When the temperature of the medium falls by the value of the switching differential, the safety limiter must be manually reset after removal of the threaded nipple.
Should the expansion liquid escape through a leak in the sensing system, the pressure in the diaphragm drops, causing the contact connection to mechanically 11-12 off.

Type summary

Product No.	Stock number	Degree of protection	Limit temperature	Capillary tube length	Scope of delivery	Pocket length [1]	Clamping band [3]
RAK-ST.1385M[2]	S55700-P105	IP65	40...70 °C	700 mm	Mounting instruction / cable gland M16 x 1.5 mm	-	-
RAK-ST.1600MP[2]	S55700-P107	IP65	95...130 °C			100 mm	-
RAK-ST.010FP-M[2]	S55700-P100	IP43	95 °C			100 mm	-
RAK-ST.020FP-M[2]	S55700-P101	IP43	100 °C			100 mm	-
RAK-ST.030FP-M[2]	S55700-P102	IP43	110 °C			100 mm	-
RAK-ST.1310P-M[2]	S55700-P104	IP43	90...110 °C			100 mm	-
RAK-ST.1300P-M[2]	S55700-P103	IP43	110...130 °C			100 mm	-
RAK-ST.1430S-M[2]	S55700-P106	IP43	80...100 °C	1600 mm		-	Yes

1) Pocket ALT-SB100, brass nickel-plated, PN10

2) According to DIN 14597

3) Clamping band for max. pipe dia. 100 mm

Accessories

Refer to Data Sheets N1193 and N1194.
RAK-ST.1385M: The perforated pocket ALT-AB200 or another pocket (standard pocket for liquids ALT-SB100) must be ordered as a separate item (refer to Data Sheets N1193 and N1194).

Ordering

When ordering, please give product number according to “Type summary“ (standard set).

If the accessories required are not those included in the standard set, they can be ordered separately according to the product nos. given in Data Sheets N1193 and N1194.

Mechanical design

Housing

- The entire housing of the thermostat is made of PC plastic and is designed for pipe, pocket or wall mounting; the safety limiter (STB) uses a capillary type sensing element.
- The cover is made of PC and has a viewing window and a removable threaded nipple for resetting the thermostat.
- The cable gland is standard M 16 x 1.5 mm.
- The PC plastic is especially designed to be flame-resistant, UV protected and suited for high temperatures and resistant to against chemical and biological influences.

Notes

Mounting aid	Installation Instructions are enclosed in the package.
Mounting location	It must be ensured that there is sufficient clearance above the thermostat for seeing through the viewing window, for adjusting the switch-off temperature, (e.g. type RAK-ST.1300P-M) and for removing and replacing the thermostat, if required.
Pipe mounting	The clamping band should be properly tightened to ensure the entire length of the sensing element is in close contact with the pipe's surface.
Pocket mounting	Mount the pocket and adjust the hexagon as required. Immerse the capillary sensing element in the pocket and secure the base to the pocket by means of the screw.
Wall mounting with sensing element in the pocket	To prepare for wall mounting, knock out the fixing holes in the housing and pull out the capillary tube until the required length is reached. After immersing the capillary sensing element in the pocket, secure it with a clamp (mounting accessories).
⚠ Temperature setting	The switch-off temperature (40…70 °C or 95..130 °C) must be adjusted by qualified personnel.
⚠ Wiring	The appliance must be wired by the installer only. The cables used must meet the insulation requirements for mains voltage. In case of rupture of the capillary tube, contact 11-12 will open (fail-safe function). Wire the thermostat according to the connection diagram and in compliance with local regulations.
⚠ Max. AC 250 V	Caution: prior to opening the housing, disconnect the thermostat from the mains supply.
⚠ ⏚	Earth connections must be made in compliance with the regulations.

Disposal

The devices are considered electronics devices for disposal in terms of European Directive 2012/19/EU and may not be disposed of as domestic waste.

- Dispose of the device via the channels provided for this purpose.
- Comply with all local and currently applicable laws and regulations.

Technical data

Switching mechanism	Switching capacity		
	Nominal voltage		AC 24…250 V
	Nominal current I (I_M)	contact 11-12	0.1...16 (2.5)
		contact 11-13	2 (0.4) A (terminal for alarm)
	External fuse		16 A
	Life expectancy at nominal rating		Min. 300switching cycles
	Estimated value for B_{10d}		B_{10d} = 250‘000 (DIN EN ISO 13849-1)
	Safety class		I to EN 60 730
	Degree of protection:		IP43 or IP65 to EN 60 529
	Fixed switch-off temperature		
	RAK-ST.010FP-M		95 °C
	RAK-ST.020FP-M		100 °C
	RAK-ST.030FP-M		110 °C
	Switch-off temperature, internally adjustable RAK-		(with tool)
	RAK-ST.1300P-M		110...130 °C
	RAK-ST.1310P-M		90...110 °C
	RAK-ST.1430S-M		80...100 °C
	RAK-ST.1385M		40…70 °C
	RAK-ST.1600MP		95…130 °C
	Thermal switching differential		
	RAK-ST.1385M RAK-ST.1600MP RAK-ST.010FP-M / RAK020FP-M / RAK030FP-M/ RAK1430S-M RAK-ST.1300P-M / RAK1310P-M		10 K
Directives and Standards	Product standard		EN 60730-x DIN EN 14597 (STB1196) [1)]
	EU Conformity (CE)		CE1T1204xx [1)]
	Radio interference protection		Click rate N ≤5 to EN 55 014
Environmental conditions	Operation		Class 3K5 to IEC 60 721-3-3
	Max. temperature on bulb		switch-off temperature + 25 K
	Ambient temperature at the housing		max. 80 °C (T80)
	Humidity		< 95 % r.h.
	Mechanism		class 3M2 to IEC 60 721-3-3
	Storage and transport		class 2K3 to IEC 60 721-3-2
	Ambient temperature		-25…+ 70 °C
	Humidity		< 95 % r.h.
	Max. temperature socket		125 °C
	Degree of pollution		2 to EN 60 730
	Controlled medium		Water, oil, air
	Ambient temperature compensation for switching mechanism and capillary tube		22 °C DIN EN 14 597
Environmental compatibility	The product environmental declaration CE1E1186[1)] contains data on environmentally compatible product design and assessments (RoHS compliance, materials composition, packaging, environmental benefit, disposal).		

Calibration	Calibration temperature	RAK-ST.1385M: 45 °C RAK-ST.1600MP: 100 °C RAK-ST.010FP-M: 95 °C RAK-ST.020FP-M: 100 °C RAK-ST.030FP-M: 110 °C RAK-ST.1300P-M: 120 °C RAK-ST.1310P-M: 100 °C RAK-ST.1430S-M: 90 °C
	Manufacturing deviation	+0 /-6 °C
	Drift after life expectancy	< ±5 %
	Calibrated for ambient temperature at the switching mechanism and capillary tube	
	RAK-ST.1385M	50 °C to DIN EN 14597
	RAK-ST.1600MP	22 °C to DIN EN 14597
	RAK-ST.010FP-M	22 °C to DIN EN 14597
	RAK-ST.020FP-M	22 °C to DIN EN 14597
	RAK-ST.030FP-M	22 °C to DIN EN 14597
	RAK-ST.1300P-M	22 °C to DIN EN 14597
	RAK-ST.1310P-M	22 °C to DIN EN 14597
	RAK-ST.1430S-M	22 °C to DIN EN 14597
	Time constant in: water	<45 s to DIN EN 14597
	oil	<60 s to DIN EN 14597
	air	<120 s to DIN EN 14597
Connections	Electrical connections	Push In [2] terminals for wires 6 x 0.75...2.5 mm²
	Earth connection	Push In [2] terminals for wires 2 x 0.75...2.5 mm²
	Cable gland	M16 x 1.5 mm (max. 4-core cable)
	External wiring flexible cord	Designed to be connected with unprepared conductors or prepared conductors, e.g. ferrules
General data	Housing colors	Base RAL 7001 (dark-grey) cover RAL 7035 (light-grey)
	Dimensions of sensing element	6.5 mm dia x 85 mm resp. 6.5 mm dia x 76 mm
	Capillary tube length All types	700 mm
	Min. bending radius of capillary	R min. = 5 mm
	Construction	
	Carrier of switching mechanism	Plastic
	Capillary tube and sensing element	Copper
	Diaphragm	Stainless steel
	Weight of standard set	0.35 kg

1) The documents can be downloaded from http://siemens.com/bt/download.

2) Push In is a patented connection technology designed by Weidmüller, Germany's leading manufacturer of electrical connection technologies.

Connection diagram

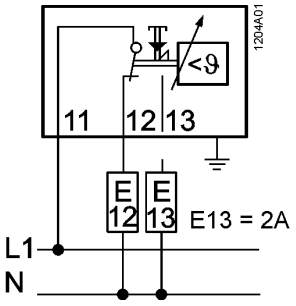

E13: Alarm

Dimensions

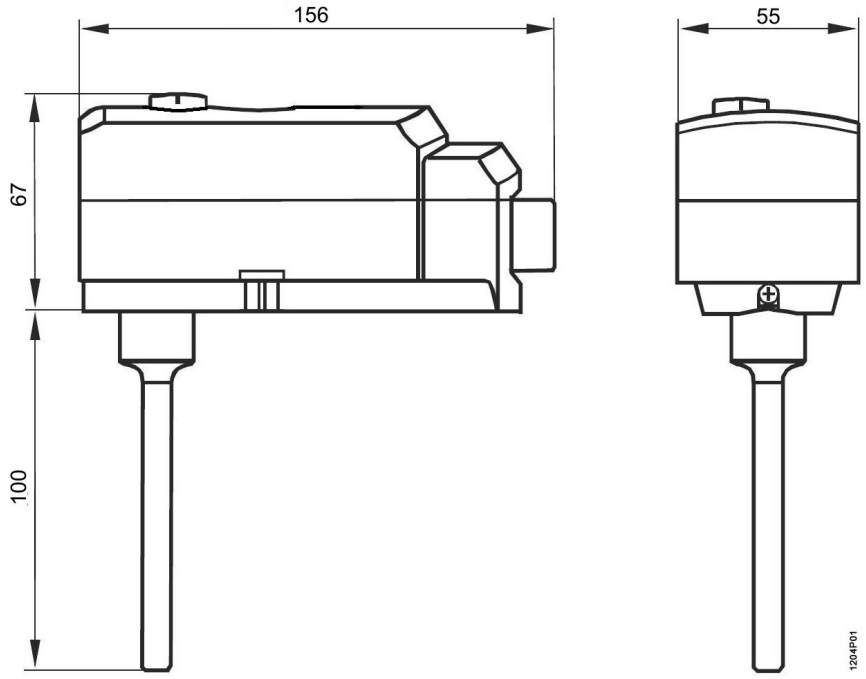

© 2005 - 2014 Siemens Switzerland Ltd