Oil Burner Controls LAL...

Oil burner controls

- **For oil atomizing burners of medium to large capacity**
- **For multistage or modulating burners in intermittent operation**
- **With or without air pressure supervision for checked air damper control**
- **Flame supervision**
  - **– with photoresistive detector QRB**
  - **– or blue-flame detector QRC1**
  - **– or photocell detector RAR9**

The LAL and this Data Sheet are intended for OEMs which integrate the oil burner controls in their products!

Use

- For the control and supervision of oil atomization burners
- For burners of medium to high capacity
- For intermittent operation (at least one controlled shutdown every 24 hours)
- Can be universally used with multistage or modulating burners
- Suited for use with stationary air heaters (WLE)

Flame supervision is ensured by means of photoresistive detector QRB, blue flame detector QRC1, or photocell detector RAR9.

LAL1	- Yellow- and blue-flame burners without air pressure supervision
LAL2	- Yellow-flame burners with air pressure supervision
LAL3.25	- For special applications, e.g. burners of incinerator plant (for details, refer to «Type summary» and «Notes»)

Supplementary documentation

Product type	Type of documentation	Documentation number
LOK16 (For burner controls used in connection with burners for continuous operation)	Data Sheet	N7785

Warning notes

To avoid injury to persons, damage to property or the environment, the following warning notes must be observed!

Do not open, interfere with or modify the unit!

- All activities (mounting, installation and service work, etc.) must be performed by qualified staff
- Before making any wiring changes in the connection area, completely isolate the plant from mains supply (all-polar disconnection). Ensure that the plant cannot be inadvertently switched on again and that it is indeed dead. If not observed, there is a risk of electric shock hazard
- Ensure protection against electric shock hazard by providing adequate protection for the burner control's connection terminals
- Each time work has been carried out (mounting, installation, service work, etc.), check to ensure that wiring is in an orderly state and make the safety checks as described in «Commissioning notes»
- Press the lockout reset button only manually (applying a force of no more than 10 N), without using any tools or pointed objects
- Do not press the lockout reset button on the unit or the remote reset button (input 21) for more than 10 seconds since this will damage the lockout relay in the unit
- Fall or shock can adversely affect the safety functions. Such units must not be put into operation, even if they do not exhibit any damage
- For safety reasons – self-test of the flame supervision circuit, etc. – at least one controlled shutdown must take place every 24 hours

Mounting notes

- Ensure that the relevant safety regulations are complied with
- Connect the earthing lug inside the terminal base to burner ground using a screw with a lockwasher

Note!
In applications involving air heaters (WLE), or in the case of oil burners with a maximum throughput of >30 kW/h, removing wire link **B** is not permitted.

Installation notes

- Always run high-voltage ignition cables separately, with the greatest possible distance to the unit and to other cables
- Live and neutral conductors must not be mixed up
- Install switches, fuses, earthing, etc., in compliance with local regulations
- Make certain that the maximum permissible current rating of the connection terminals will not be exceeded
- The insulation on internal wiring which is subjected to the mains voltage must withstand the electrical stress occurring during correct use

Electrical connection of the flame detector

It is important to achieve practically disturbance- and loss-free signal transmission:

- Never run the detector cable together with other cables
  – Line capacitance reduces the magnitude of the flame signal
  – Use a separate cable
- Observe the permissible cable lengths (refer to «Technical data»)

Commissioning notes

When commissioning the plant or when doing maintenance work, make the following safety checks:

	Safety check to be carried out	Anticipated response
a)	Burner startup with flame detector darkened	Lockout at the end of safety time (TSA)
b)	Burner startup with flame detector exposed to extraneous light	Lockout after 40 seconds at the latest
c)	With wire strap «B»: Simulation of loss of flame during operation. For that purpose, darken the flame detector during operation and maintain that state	Lockout
d)	Without wire strap «B»: Simulation of loss of flame during operation. For that purpose, darken the flame detector during operation and maintain that state	Repetition followed by lockout at the end of «TSA»
e)	Burner startup with response of air pressure switch	Prevention of startup/lockout during prepurge time
f)	Burner operation with simulated air pressure failure	Immediate lockout

Engineering notes

- Install switches, fuses, earthing, etc., in compliance with local regulations
- Connect valves and other plant components as specified in the burner manufacturer's documentation

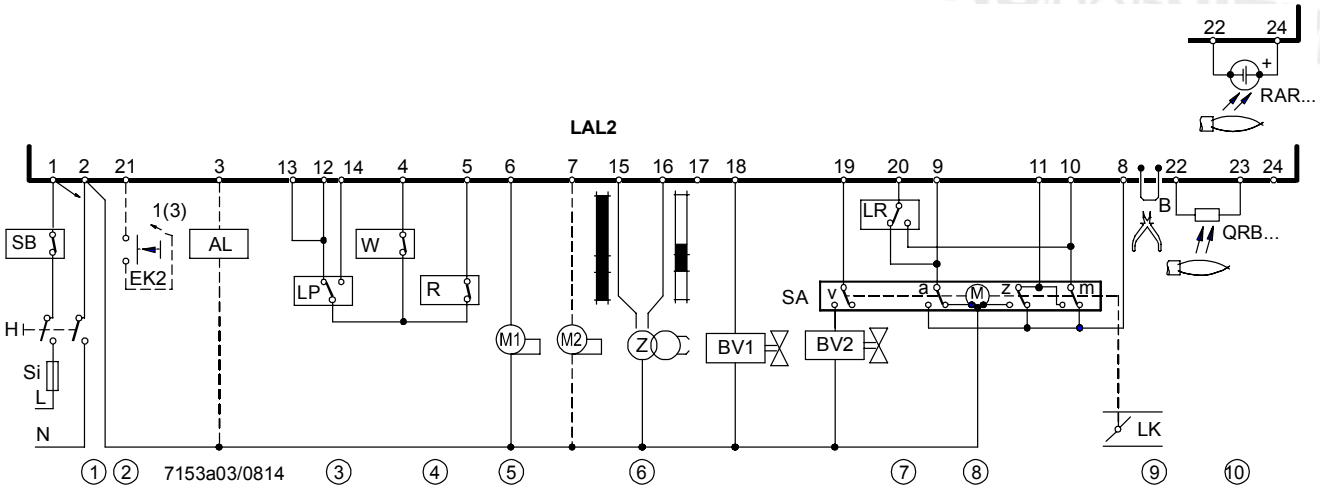

Engineering notes (cont'd)

①	Connect safety limit thermostats (manual reset) in the line (e.g. «SB»)
②	Remote reset When connecting lockout reset button «EK2» between terminals 21 and - terminal 3: For remote reset only - terminal 1: For remote reset and remote emergency shutdown
③	With LAL1…: Required switching capacity of - switching devices connected between terminals 4 and 5 (refer to «Technical data»)
	With LAL2 / LAL3: Required switching capacity of - switching devices connected between terminal 12 and «LP» (refer to «Technical data») - «LP» (refer to «Technical data»)
④	When using series connection, the control contacts of other devices contained in the burner plant must be connected as follows:
	- to terminal 4 or 5 → contacts that must be closed from startup to controlled shutdown → otherwise no startup or shutdown
	- to terminal 12 (not with LAL1) → contacts that must only be closed on startup → otherwise no startup
	- to terminal 14 (not with LAL1) → contacts that must be closed no later than at the beginning of short preignition or long preignition and that must remain closed until controlled shutdown occurs → otherwise lockout
⑤	Maximum current draw, refer to «Technical data»
⑥	«Z» connected to terminal 15 → short and long preignition
	☞ For use in applications with short preignition, the oil supply must be equipped with two shutoff valves connected in series. Observe the following: EN 298:2012, Section 7.101.3.3 *Prepurge time for oil burner control systems and the corresponding application standards*.
⑦	Connection of «BVx» to terminal 20, refer to «Connection examples»
⑧	When using burners without air damper, or with an air damper not controlled and monitored by the LAL…, terminal 8 must be connected to terminal 6
⑨	Wire link «B» clearly marked on the underside of the LAL… When wire link «B» is fitted, the LAL initiates lockout if loss of flame occurs during operation. For repetition of the startup sequence, wire link «B» on the plug-in section of the LAL must be cut away. Just cutting is not permitted!
	☞ Note! In applications involving air heaters (WLE), or in the case of oil burners with a maximum throughput of >30 kW/h, removing wire link **B** is not permitted.
⑩	For the permissible lengths and laying of detector cables, refer to «Flame supervision»

Applied directives:

- Low-voltage directive 2014/35/EC
- Directive for pressure devices 2014/68/EC
- Electromagnetic compatibility EMC (immunity) *) 2014/30/EC

*) The compliance with EMC emission requirements must be checked after the burner control is installed in equipment

Compliance with the regulations of the applied directives is verified by the adherence to the following standards / regulations:

- Automatic burner control systems for burners and appliances burning gaseous or liquid fuels DIN EN 298
- Automatic electrical controls for household and similar use Part 2-5: Particular requirements for automatic electrical burner control systems DIN EN 60730-2-5

The relevant valid edition of the standards can be found in the declaration of conformity!

Note on **DIN EN 60335-2-102**
Household and similar electrical appliances - Safety - Part 2-102: Particular requirements for gas, oil and solid-fuel burning appliances having electrical connections. The electrical connections of the LAL and the AGM comply with the requirements of EN 60335-2-102.

EAC Conformity mark (Eurasian Conformity mark)

ISO 9001:2015
ISO 14001:2015
OHSAS 18001:2007

China RoHS
Hazardous substances table:
http://www.siemens.com/download?A6V10883536

Certified with plug-in base and flame detector:

Type						Only with QRB	
LAL1.25	●	●	●	●	●	---	---
LAL2.14	●	●	●	●	●	●	---
LAL2.25	●	●	●	●	●	●	●
LAL2.65	●	●	●	●	●	●	---
LAL3.25	●	●	●	---	●	●	●

Life cycle

Burner controls LAL has a designed lifetime* of 250,000 burner startup cycles which, under normal operating conditions in heating mode, correspond to approx. 10 years of usage (starting from the production date given on the type field).

This lifetime is based on the endurance tests in the standard EN 298.
A summary of the conditions has been published by the European Control Manufacturers Association (Afecor) (www.afecor.org).

The designed lifetime is based on use of the burner controls according to the manufacturer's Data Sheet. After reaching the designed lifetime in terms of the number of burner startup cycles, or the respective time of usage, the burner control is to be replaced by authorized personnel.

* The designed lifetime is not the warranty time specified in the Terms of Delivery

Disposal notes

The unit contains electrical and electronic components and must not be disposed of together with domestic waste.
Local and currently valid legislation must be observed.

Mechanical design

LAL

- Plug-in design
- Exchangeable unit fuse (including spare fuse)

LAL3.25

Difference to LAL1 / LAL2:

- Extraneous light does not initiate lockout, during burner off times or during the prepurge time
- Extraneous light prevents burner startup

Housing

- Made of impact-proof and heat-resistance black plastic
- Lockout reset button with viewing window; located behind it:
  – Lockout warning lamp
  – Lockout indicator
    - coupled to the spindle of the sequence switch
    - visible in the transparent lockout reset button
    - uses easy-to-remember symbols to indicate the type of fault and the point in time lockout occurred

Type summary

The type references given below apply to the LAL without plug-in base and without flame detector. For ordering information for plug-in bases and other accessories, see *Accessories*.
Switching times are given in the order of the startup sequence, valid for 50 Hz mains frequency. At 60 Hz frequency, switching times are about 17 % shorter.
The type references apply to burner controls operating on AC 230 V, 50...60 Hz.

Article no.	Type	Flame supervision with ...			Air pressure supervision	Semi-automatic startup	No lockout	Start prevention in extraneous light	Flash steam generators	Universal use	Medium- or heavy-oil burners	Times in seconds														
		QRB	QRC	RAR9								t1	TSA	t3	t3‘	t3n	t4	t5	t6	t7	t8	t10	t11	t12	t13	t16	t20
BPZ:LAL1.25	LAL1.25 [3]	●	●							●		22,5	5	2,5	From the start [1]	15	7,5	7,5	15	2,5	47	10 [2]	Optional	Optional	15	5	35
BPZ:LAL2.14	LAL2.14	●		●	●	●			●			10	4	2	From the start [1]	10	8	4	10	2	30	6	Optional	Optional	10	4	32
BPZ:LAL2.25	LAL2.25 [3]	●		●	●	●				●		22,5	5	2,5	From the start [1]	15	7,5	7,5	15	2,5	47	10 [2]	Optional	Optional	15	5	35
BPZ:LAL2.65	LAL2.65 [3]	●		●	●	●					●	66,5	5	2,5	From the start [1]	15	7,5	7,5	15	2,5	91	10	Optional	Optional	15	5	12,5
BPZ:LAL3.25	LAL3.25 [3][4]	●		●	●	●	●	●		●		22,5	5	2,5	From the start [1]	15	7,5	7,5	15	2,5	47	10 [2]	Optional	Optional	15	5	35

[1]) With air pressure supervision: From the time the air pressure signal is received
[2]) Does not apply to LAL1
[3]) Available as AC 100...110 V versions; add type suffix «– 110 V» when ordering. Flame supervision only with QRB or RAR
[4]) Special applications such as incinerator plants

Legend of times

TSA Ignition safety time
t1 Prepurge time with air damper open
t3 Preignition time, short (ignition (Z) to terminal 16)
t3‘ Preignition time, long (ignition (Z) to terminal 15)
t3n Postignition time (ignition (Z) to terminal 15)
t4 Interval between voltage at terminals 18 and 19 (fuel valve 1 (BV1) - fuel valve 2 (BV2))
t5 Interval between power at terminals 19 and 20 (fuel valve 2 (BV2) - load controller)
t6 Postpurge time (with fan motor «M2»)
t7 Interval between start command and power at terminal 7 (start delay for fan motor «M2»)
t8 Duration of startup sequence (without running time «t11» and running time «t12»)
t10 Only with LAL2 / LAL3: Interval from start to the beginning of the air pressure check
t11 Air damper running time to the OPEN position
t12 Air damper running time to the low-fire position MIN
t13 Permissible afterburn time
t16 Interval until OPEN command for the air damper is given
t20 Not with all LAL: Interval to the self-shutdown of the sequence switch after startup

Accessories (to be ordered separately)

Flame detectors	Photoresistive detectors **QRB** See Data Sheet N7714	
	Blue-flame detectors **QRC1** See Data Sheet N7716	Frontal illumination: Lateral illumination:
	Photocell detector **RAR9** See Data Sheet N7713	
Actuators	Actuator **SQN3** See Data Sheet N7808	
Accessories for medium-capacity burner controls	Plug-in base **AGM410490500** Article no.: **BPZ:AGM410490500** • With Pg11 thread for cable entry glands • See Data Sheet N7230 Plug-in base **AGM13.1** Article no.: **BPZ:AGM13.1** • With M16 thread for cable entry glands • See Data Sheet N7230	
Others	Coaxial cable **RG62** Supplied by customer.	

General unit data LAL	Mains voltage	AC 230 V –15 / +10 %
	• With LAL1 / LAL2 / LAL3	AC 100 V –15 %...AC 110 V +10 %
	Mains frequency	50...60 Hz ±6 %
	Unit fuse (built-in)	T6.3H250V to DIN EN 60127
	Primary fuse (external)	Max. 10 A (slow)
	Weight	Approx. 1,000 g
	Power consumption	Approx. AC 3.5 VA
	Mounting position	Optional
	Degree of protection	IP40, when fitted, with the exception of the connection area (terminal base)
	Safety class	II
	Perm. input current at terminal 1	Max. 5 A continuously (peaks of 20 A / 20 ms)
	Perm. current rating of control terminals 3, 6, 7, 9...11 and 15...20	Max. 4 A continuously (peaks of 20 A / 20 ms)
	Required switching capacity of switching devices	
	• Between terminals 4 and 5	1 A, AC 250 V
	• Between terminals 4 and 12	1 A, AC 250 V
	• Between terminals 12 and «LP»	1 A, AC 250 V
	• Between terminals 4 and 14	5 A (peaks of 20 A)
	• «LP»	5 A
	Permissible length of the standard detector cable (laid separately)	See *Technical data*, section *Flame supervision*
	Capacity	
	• Starting output (without fan)	Optional (with ignition < 120 kW)
	• Nominal output	Optional
Environmental conditions	**Storage**	DIN EN 60721-3-1
	Climatic conditions	Class 1K3
	Mechanical conditions	Class 1M2
	Temperature range	-20...+60 °C
	Humidity	<95 % r.h.
	Transport	DIN EN 60721-3-2
	Climatic conditions	Class 2K2
	Mechanical conditions	Class 2M2
	Temperature range	-40...+60 °C
	Humidity	<95 % r.h.
	Operation	DIN EN 60721-3-3
	Climatic conditions	Class 3K5
	Mechanical conditions	Class 3M2
	Temperature range	-20...+60 °C
	Humidity	<95 % r.h.
	Installation altitude	Max. 2,000 m above sea level

Warning!
Condensation, formation of ice and ingress of water are not permitted!
If this is not observed, there is a risk of loss of safety functions and a risk of electric shock.

Flame supervision

	LAL1 with		LAL2 * / LAL3 * with	
	QRB	QRC1	QRB	RAR9
Min. detector current required at AC 230 V	95 µA	80 µA	8 µA	6,5 µA
Max. permissible detector current with no flame	12 µA	12 µA	0.8 µA	0.7 µA
Max. detector current that can occur	160 µA	130 µA	35 µA	45 µA
Instrument's +pole	To terminal 23	To terminal 23	To terminal 22	To terminal 22
Length of detector cable				
In the same cable as the control lines	Max. 30 m	---	Not permitted	---
Separate cable in cable duct	Max. 1000 m	---	20 m	30 m
3-core cable	---	Max. 1 m	---	---
2-core cable for the detector line (bl, sw); separate single-core cable for the live conductor (br)	---	Max. 20 m	---	---
Shielded cable (e.g. RG62, shield insulated)	---	---	200 m	RAR9: 100 m
Shield	---	---	To terminal 23	---

* To comply with requirement of EN 298 clause 8.5 «Surge immunity test», for cable lengths above 10 m appropriate filter elements would have to be used. Experience has shown that filters are sometimes not necessary for normal operation even for cable lengths above 10 m.

Detector current measurement

Measuring circuit for detector current measurement

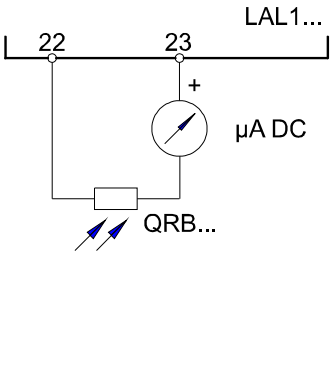

7153v01/0814

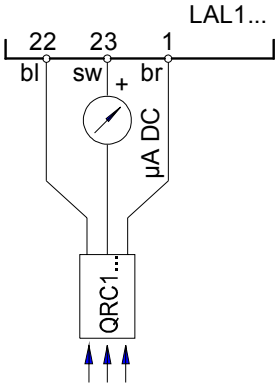

7153v05/1206

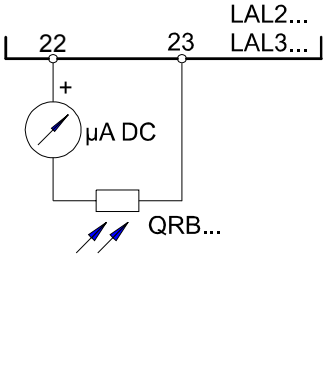

7153v02/0814

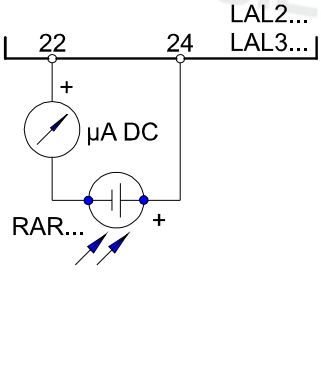

7153v03/0498

2-stage expanding flame burner

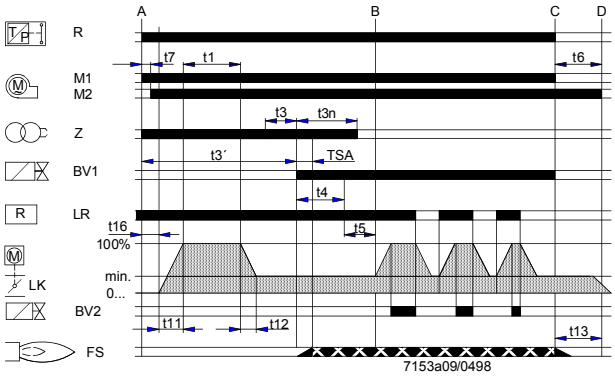

Modulating expanding flame burner

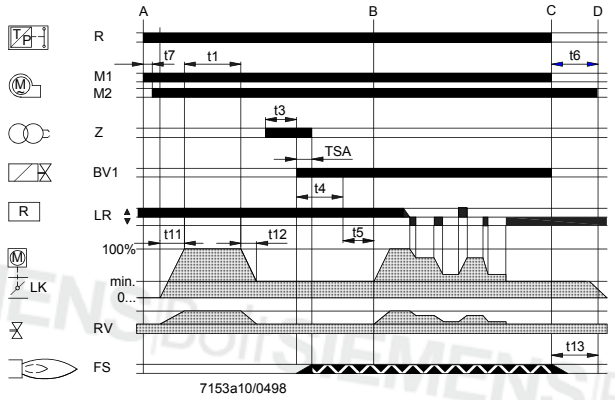

Legend

BV...	Fuel valve
FS	Flame signal amplifier
LK	Air damper
LR	Load controller
M...	Fan or burner motor
R	Control thermostat or pressurestat
RV	Modulating fuel valve
Z	Ignition transformer
A	Start command by «R»
B	Operating position of burner
B-C	Burner operation
C	Controlled shutdown
C-D	Sequence switch travels to start position «A», postpurging
D-A	End of control sequence
t1	Prepurge time with air damper open
t3	Preignition time
t4	Interval fuel valve 1 (BV1) - fuel valve 2 (BV2) or fuel valve 1 (BV1) - load controller (LR)
t5	Interval between voltage at terminal 19 and terminal 20
t6	Postpurge time
t7	Interval between start command and power at terminal 7
t11	Air damper running time to the OPEN position
t12	Air damper running time to the low-fire position
t13	Permissible afterburn time
TSA	Ignition safety time

General

The following features of the LAL afford a high level of safety:

- Detector and flame simulation test are restarted on completion of the afterburn time «t13». Open or not fully closed fuel valves immediately initiate lockout at the end of afterburn time «t13». The test ends on completion of the prepurge time «t1» of the next startup sequence
- The correct functioning of the flame supervision circuit is automatically checked during each burner startup sequence
- The control contacts for the release of fuel are checked to ensure they have not welded postpurge time «t6»
- A built-in unit fuse protects the control contacts against overloads

Control of the burner

- Burner operation with or without postpurge
- Fan motors with a current draw of up to 4 A can be connected directly → starting current max. 20 A (for max. 20 ms)
- Separate control outputs for
  – preignition from start command
  – postignition until shortly before the burner startup sequence is completed
  – short preignition with postignition up to the end of «TSA»
- Separate control outputs for the actuator's positioning directions «OPEN», «CLOSE» and «MIN»
- Checked air damper operation to ensure prepurging with the nominal air volume
- Checked positions:
  - «CLOSED» or «MIN» on startup → low-fire position
  - «OPEN» at the beginning of prepurging
  - «MIN» on completion of prepurging
  If the actuator does not drive the air damper to the required position, the burner startup sequence will be stopped
- 2 control outputs for the release of the second and third output stage or for load control
- When load control is enabled, the control outputs for the actuator will be galvanically separated from the burner control's control section
- Connection facilities for
  – remote lockout warning device
  – remote reset
  – remote emergency shutdown
- In addition, with LAL2 / LAL3:
  – possibility of air pressure supervision with functional test of the air pressure monitor on startup
  – possibility of semiautomatic burner startup

Flame supervision

- Flame detector and flame simulation test are made automatically during burner off times and the prepurge time «t1»
- If loss of flame occurs during operation, the burner control will initiate lockout
- If automatic repetition of the startup sequence is required, the clearly marked wire link on the plug-in section of the LAL must be cut away → start repetition

Preconditions for burner startup

- Burner control is not in the lockout position
- Sequence switch is in its start position
  → with LAL1, voltage is present at terminals 4 and 11
  → with LAL2 / LAL3, voltage is present at terminals 11 and 12
- Air damper is closed
- End switch «z» for the «CLOSED» position must feed power from terminal 11 to terminal 8
- Contact of the limit thermostat or pressure switch «W» and the contacts of any other switching devices in the control loop between terminals 4 and 5 must be closed → e.g. a control contact for the oil preheaters temperature

With the exception of LAL1 Normally closed contact of the air pressure switch must be closed → «LP» test.

A **Start command by «R»**

→ «R» closes the start control loop between terminals 4 and 5

- The sequence switch starts to run
  - Only prepurging, fan motor at terminal 6 receives power
  - Pre- and postpurging, fan motor or flue gas fan at terminal 7 receives power on completion of «t7»
- On completion of «t16», the control command for opening the air damper is delivered via terminal 9
- Terminal 8 receives no power during the positioning time
- The sequence switch continues to run only after the air damper has fully closed

t1 **Prepurge time with air damper fully open**

- The correct functioning of the flame supervision circuit is checked during «t1»
- The burner control will initiate lockout if correct functioning is not ensured

With **LAL2 / LAL3**:
Shortly after the beginning of «t1», the air pressure switch must change over from terminal 13 to terminal 14
→ otherwise, the burner control will initiate lockout
→ start of the air pressure check

t3 **Short preignition time**

«Z» must be connected to terminal 16, release of fuel via terminal 18.

For use in applications with short preignition, the oil supply must be equipped with two shutoff valves connected in series.

Observe the following:
EN 298:2012, Section 7.101.3.3 *Prepurge time for oil burner control systems and the corresponding application standards*.

t3´ **Long preignition time**

«Z» connected to terminal 15.

With **LAL1**
«Z» is switched on when start command is given.

With **LAL2 / LAL3**
«Z» is switched on when «LP» changes over.
→ no later than at the end of «t10»

- On completion of «t1», the LAL drives the air damper to the low-fire position via terminal 10
  → the low-fire position is defined by the changeover point of auxiliary switch «m» in the actuator
- During the positioning time, the sequence switch maintains its position
  → until terminal 8 receives power via «m»
- The motor of the sequence switch is switched to the control section of the LAL
  → positioning signals delivered to terminals 8 now have no impact on the further startup sequence and on subsequent burner operation

TSA **Ignition safety time**

On completion of «TSA», a flame signal must be present at terminal 22. It must be available until controlled shutdown occurs
→ otherwise, the burner control will initiate lockout and lock itself in the lockout position

t3n **Postignition time**

- «Z» must be connected to terminal 15
- With short preignition, «Z» remains on until «TSA» has elapsed
  → connection to terminal 16

t4 **Interval «BV1 – BV2» or «BV1 - LR»**

- On completion of «t4», voltage is present at terminal 19
- The voltage is required to power «BV2» connected to auxiliary switch «v» in the actuator

t5 **Interval**

- On completion of «t5», terminal 20 receives power. At the same time, control outputs 9 to 11 and input 8 are galvanically separated from the LAL's control section
  → LAL is now protected against reverse voltages from the load control circuit
- With the release of «LR» at terminal 20, the startup sequence of the LAL ends
- After a few idle steps the sequence switch switches itself off. That is, the idle steps do not cause any change in the contact position.

B **Operating position of the burner**

B-C **Burner operation**

- During burner operation, «LR» drives the air damper to the nominal load or low-fire position, depending on heat demand
- Release of the nominal load takes place via auxiliary switch «v» in the actuator
- In the event of loss of flame during operation, the LAL will initiate lockout
- For automatic start repetition, the clearly marked wire link «B» on the plug-in section of the LAL must be cut away

C **Controlled shutdown**

In the case of controlled shutdown, «BVx» will immediately be closed. At the same time, the sequence switch is started to program «t6».

C-D **Sequence switch travels to start position «A»**

t6 **Postpurge time**

- Fan «M2» connected to terminal 7
- Shortly after the start of «t6», terminal 10 receives power
  → air damper is driven to the «MIN» position
- Full closing of the air damper starts only shortly before «t6» has elapsed
  → initiated by the control signal at terminal 11
- During the following burner off time, terminal 11 is live

t13 **Permissible afterburn time**

During «t13», the flame signal input may still receive a flame signal
→ no lockout

D-A **End of control program**

→ start position
As soon as the sequence switch has reached the start position – having thereby switched itself off – the flame detector and flame simulation test will start again.
During burner off times, the flame supervision circuit is live.

When the start position is reached:
With **LAL1**, a voltage signals is fed to terminal 4
With **LAL2 / LAL3**, a voltage signal is fed to terminal 12

In case of any disturbance, the supply of fuel will immediately be interrupted.
Whenever a fault occurs, the sequence switch stops and with it the lockout indicator.

The symbol appearing above the reading mark indicates the type of fault:

◀	No start	• One of the contacts is not closed (also refer to «Preconditions for burner startup») • Extraneous light: Lockout during or after completion of the control program Examples: – Nonextinguished flame – Leaking fuel valves – Faulty flame supervision circuit
▲	Interruption of startup sequence	• No «OPEN» signal at terminal 8 from the end switch «a» • Terminals 6, 7 and 15 are live until fault has been corrected
P	Lockout	Does not apply to LAL1: • No air pressure indication at the beginning of the air pressure check • Air pressure failure after the air pressure check
■	Lockout	• Defect in the flame supervision circuit
▼	Interruption of startup sequence	• No positioning signal at terminal 8 from the auxiliary switch «m» for the low-fire position • Terminals 6, 7 and 15 are live until fault has been corrected
1	Lockout	• No flame signal at the end of the safety time «TSA»
I	Lockout	• Flame signal has been lost during operation

After the lockout reset, the burner control sequence switch first returns to the start position and then initiates a burner restart.
If lockout occurs any other moment in time between start and preignition not indicated by a symbol, the usual cause is a premature flame signal, that is, a faulty flame signal caused, for instance, by extraneous light.

Lockout indicator

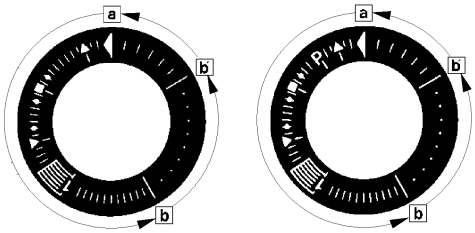

LAL1 LAL2, LAL3

a-b Startup sequence

b-b´ Idle steps (with no contact confirmation)

b (b´)-a Postpurge program

- Burner control can immediately be reset after lockout:
  – Do not press the lockout reset button for more than 10 seconds
- The sequence switch always travels to the start position first
  – After resetting
  – After rectification of a fault that led to shutdown
  – After each power failure
  During this period of time, power is only fed to terminals 7 and 9...11.
- Then, the burner control will program a new burner startup sequence

☞ Note!
Do not press the lockout reset button for more than 10 seconds.

LAL1

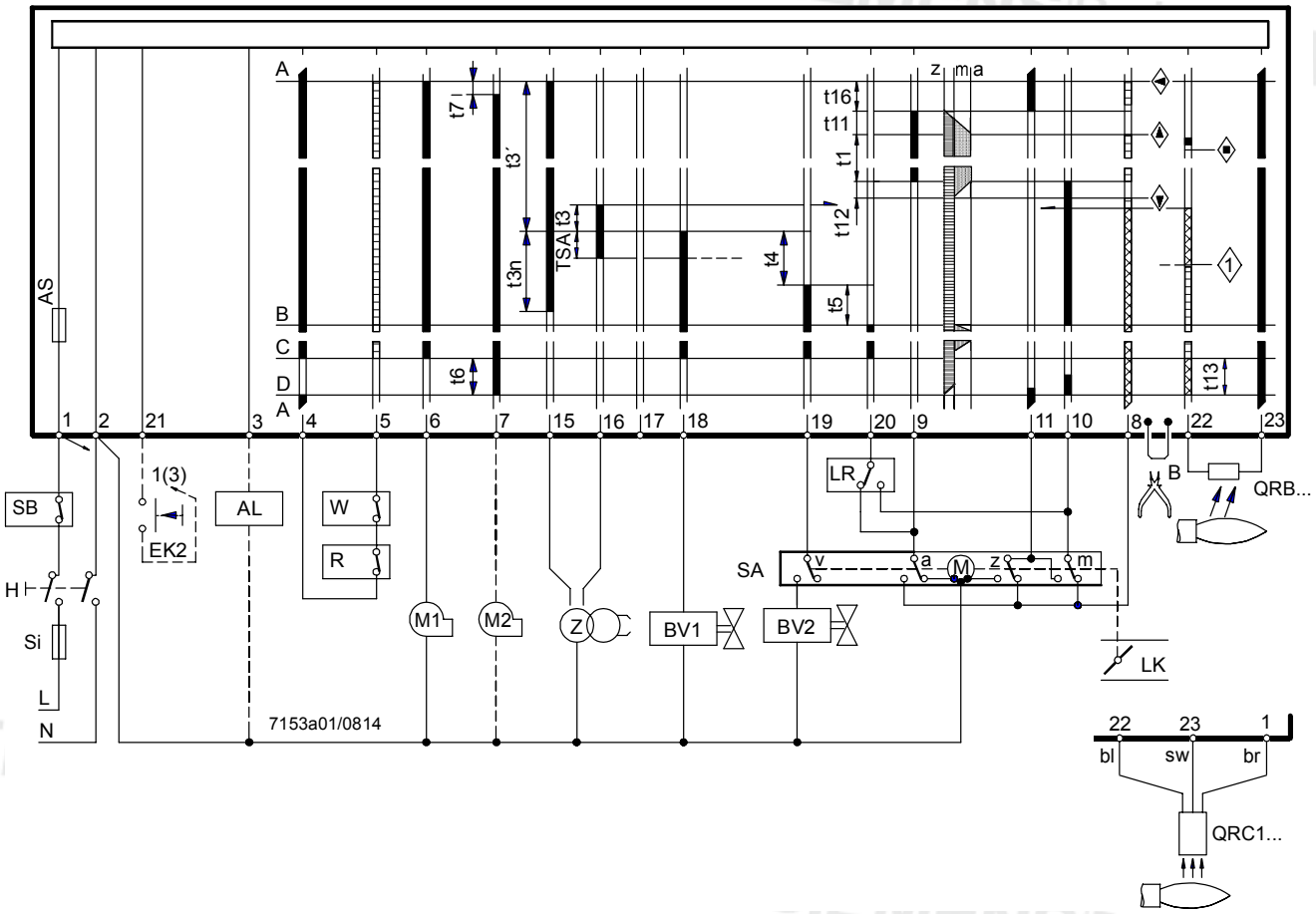

Note!
In applications involving air heaters (WLE), or in the case of oil burners with a maximum throughput of > 30 kW/h, removing wire link **B** is not permitted.

Caution!
Do not press lockout reset button (EKx) for more than 10 seconds!

LAL2 / LAL3

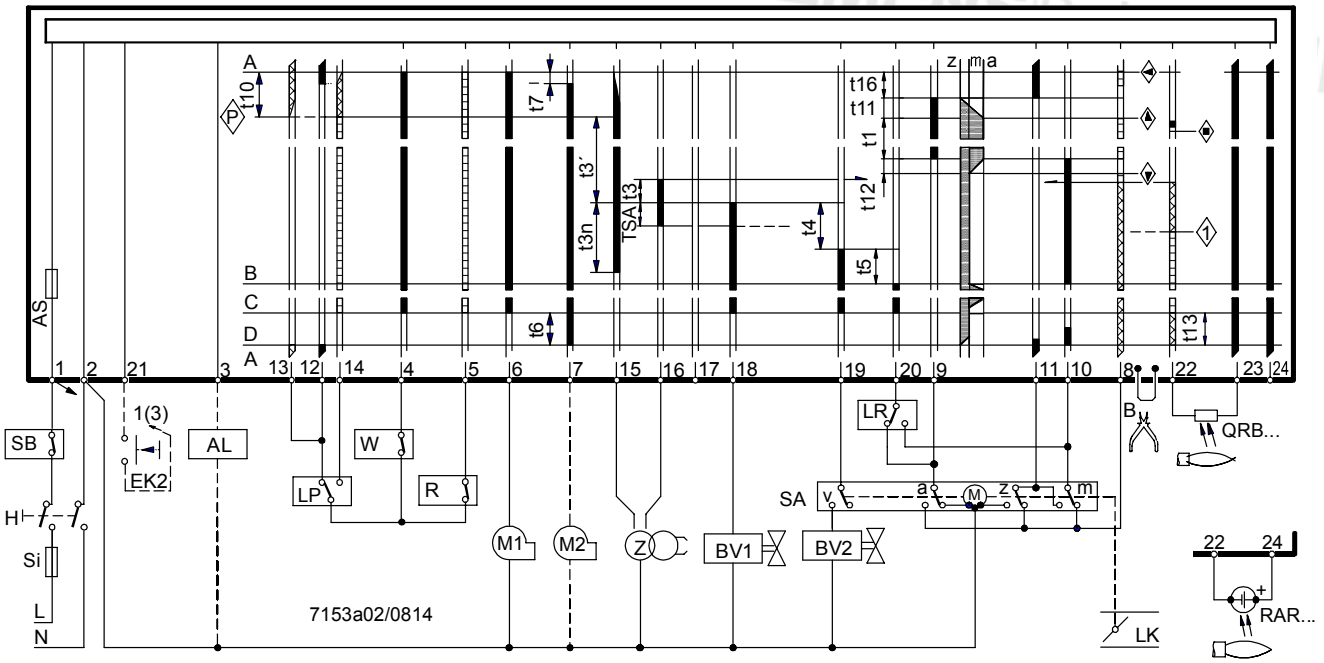

Caution!
Do not press lockout reset button (EKx) for more than 10 seconds!

LAL1

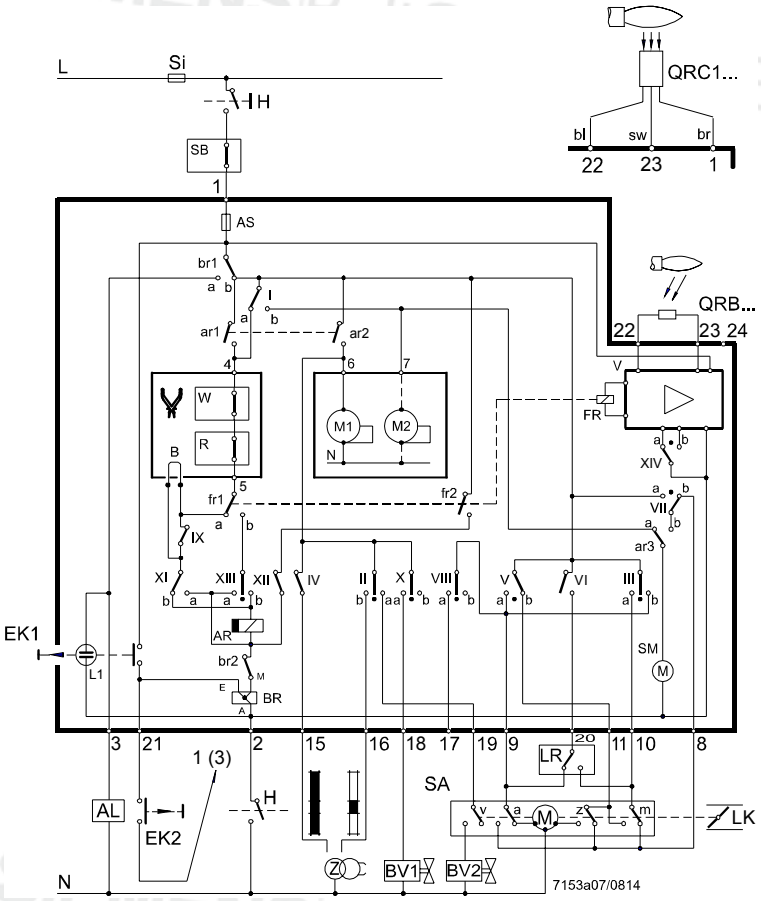

LAL2 / LAL3

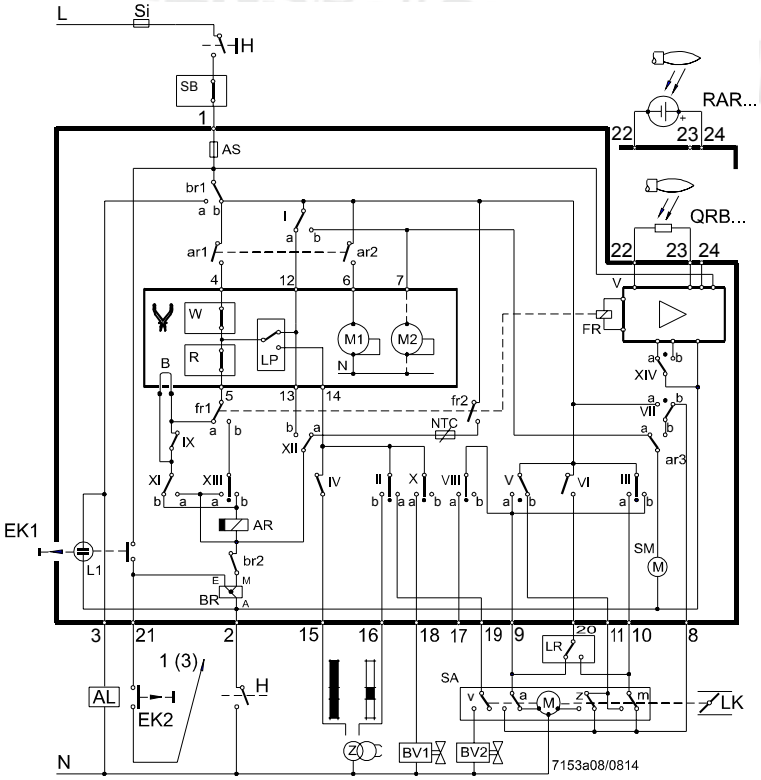

Warning!
Do not press the lockout reset button «EKx» for more than 10 seconds!
For the connection of the safety shutoff valve, refer to the plant diagram provided by the burner supplier.

Sequence diagram

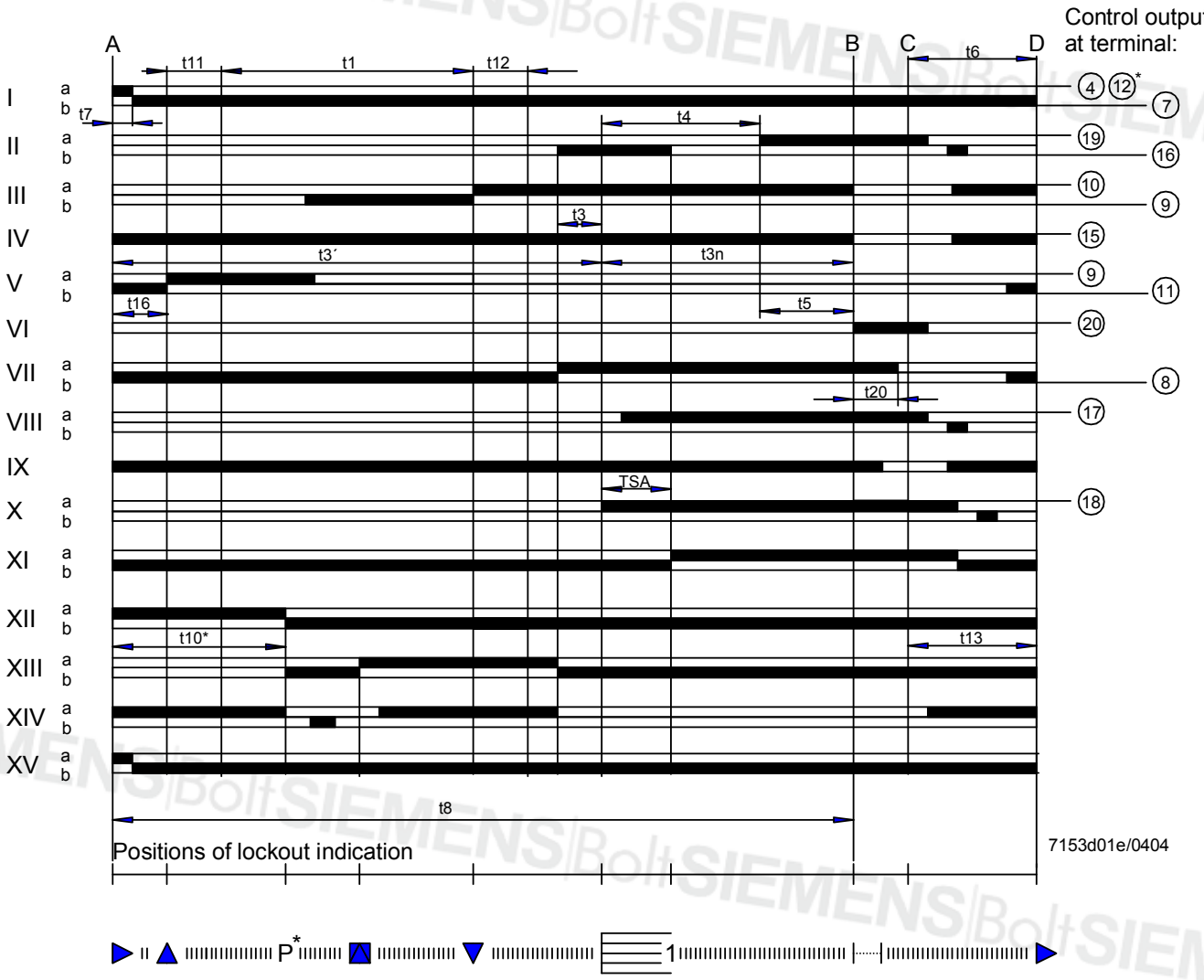

* These data do not apply to LAL1

Connection examples

Connection of actuators without end switch for the «CLOSED» position

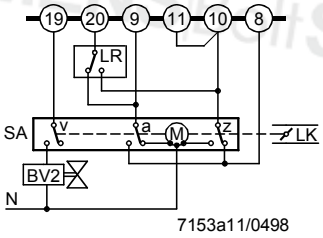

«z» adjusted for low-fire air volume.

Control of actuator during operation by control signals fed to terminal 17

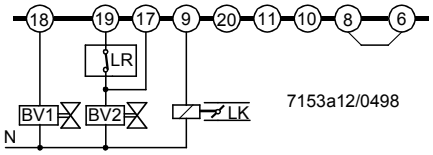

For signal path, refer to «Connection diagrams».

Control of «BVx» via terminal 20

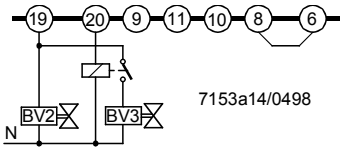

Relay is not required if «BV3» at terminal 20 is hydraulically series-connected with «BV2».
«BV2» is controlled by terminal 18 or 19.
→ Burner with no air damper or with air damper not controlled by the LAL…

Wiring required with LAL2 for operation with no air pressure supervision

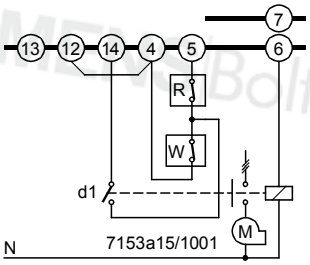

If an auxiliary contact «d1» of the fan contactor is included in the circuit as shown in the diagram, ignition and release of fuel take place only when the contact is closed.

Semiautomatic startup

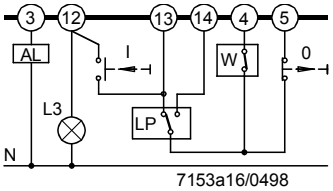

The burner is switched on manually by pressing the «I» button.
Then, the LAL programs startup and flame supervision.
Burner shutdown is also made manually by pressing the «0» button, or automatically when limit thermostat or pressure switch «W» responds.
«L3» indicates when the burner is ready for startup. It extinguishes shortly after the burner is started up.
For other connections, refer to «Connection diagrams».

2-stage expanding flame burner

Load control with a 2-position controller.
During burner off times, the air damper is closed.

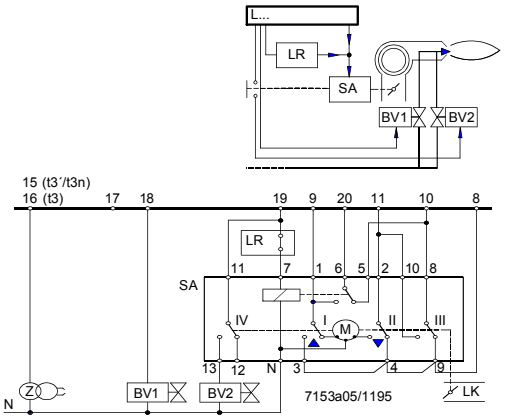

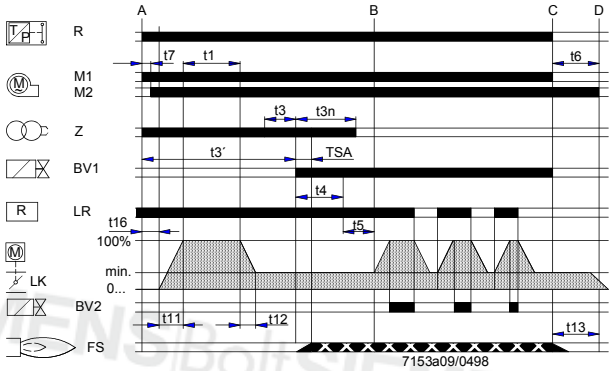

Control of actuator according to the single-wire control principle.
→ For actuator «SA» type SQN,
see Data Sheet N7808; for other connections, refer to «Connection diagrams»

Pre- and postignition when the ignition transformer is connected to terminal 15

Modulating expanding flame burner

Load control with modulating controller with galvanically separated control contacts for positioning directions «OPEN» and «CLOSE».

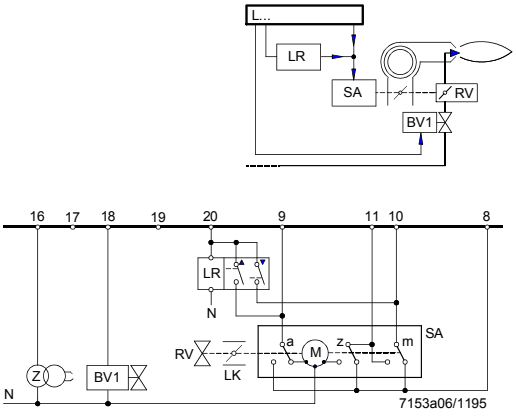

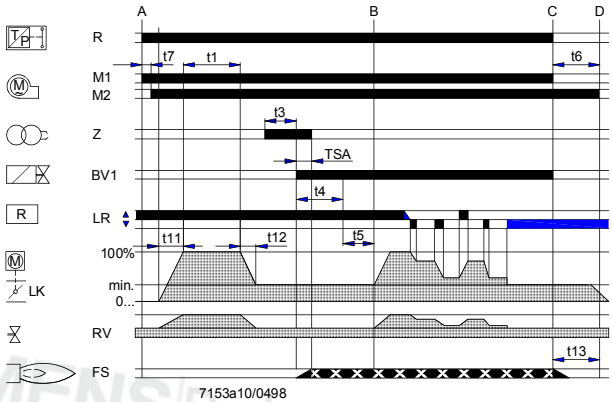

During burner off times, the air damper is fully closed.
When using actuators with end switch «z» for the «CLOSED» position, terminals 10 and 11 must be interconnected.
For other connections, refer to «Connection diagrams».

Legend

a	End switch for air damper's OPEN position
AL	Remote lockout indicator (alarm)
AR	Main relay with «ar...» contacts
AS	Unit fuse
B	Wire link (on the burner control's base)

Note!
In applications involving air heaters (WLE), or in the case of oil burners with a maximum throughput of > 30 kW/h, removing wire link **B** is not permitted.

bl	Blue
br	Brown
BR	Lockout relay with «br...» contacts
BV...	Fuel valve
EK...	Lockout reset button
FR	Flame relay with «fr...» contacts
H	Mains isolator
L...	Lockout warning lamp
LK	Air damper
LP	Air pressure switch
LR	Load controller
m	Auxiliary switch for air damper's MIN position
M	Fan or burner motor
NTC	Resistor with negative temperature coefficient
QRC1	Blue-flame detector
QRB	Photoresistive detector
R	Control thermostat or pressurestat
RAR	Photocell detector
SA	Air damper actuator
SB	Safety limit thermostat
Si	External primary fuse
SM	Synchronous motor of sequence switch
sw	Black
v	In the actuator: Auxiliary changeover switch for position-dependent release of fuel
V	Flame signal amplifier
W	Limit thermostat or pressure switch
z	In the actuator: End switch for air damper's CLOSED position
Z	Ignition transformer

A	Startup
B	Operating position
C	Controlled shutdown
D	End of control sequence

Control signals delivered by the burner control

Permissible input signals

Required input signals:
If these signals are not present at the points in time marked by symbols or during the shaded periods of time, the burner control will interrupt the startup sequence or initiate lockout

Lockout indication positions when there is no input signal (see *Control sequence in the event of faults*):

◄	No start
▲	Abortion of startup sequence
▼	Abortion of startup sequence
■	Lockout (fault in the flame supervision circuit)
1	Lockout (no flame)
P	Lockout (no air pressure)

Time table

TSA	Ignition safety time
t1	Prepurge time with air damper fully open
t3	Preignition time, short («Z» connected to terminal 16)
t3´	Preignition time, long («Z» connected to terminal 15)
t3n	Postignition time («Z» connected to terminal 15)
t4	Interval between voltage at terminals 18 and 19 («BV1-BV2»)
t5	Interval between voltage at terminals 19 and 20 («BV2» load controller)
t6	Postpurge time (with «M2»)
t7	Interval between start command and voltage at terminal 7 (start delay time for «M2»)
t8	Duration of startup sequence (excluding «t11» and «t12»)
t10	Only with LAL2 / LAL3: Interval from startup to the beginning of the air pressure check
t11	Air damper running time to the OPEN position
t12	Air damper running time to the low-fire position (MIN)
t13	
t16	Interval to the OPEN command for the air damper
t20	Not with all LAL…: For self-shutdown of the sequence switch

Dimensions in mm

LAL

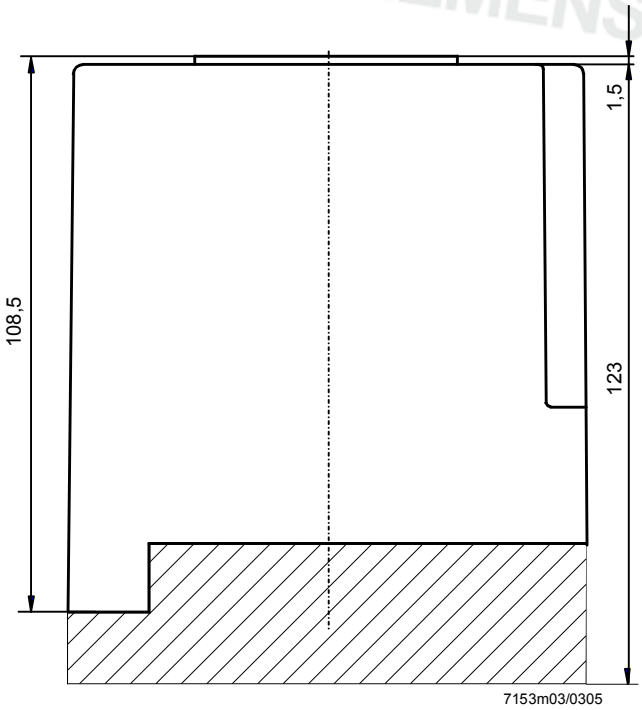

Plug-in base AGM410490500 /
AGM13.1

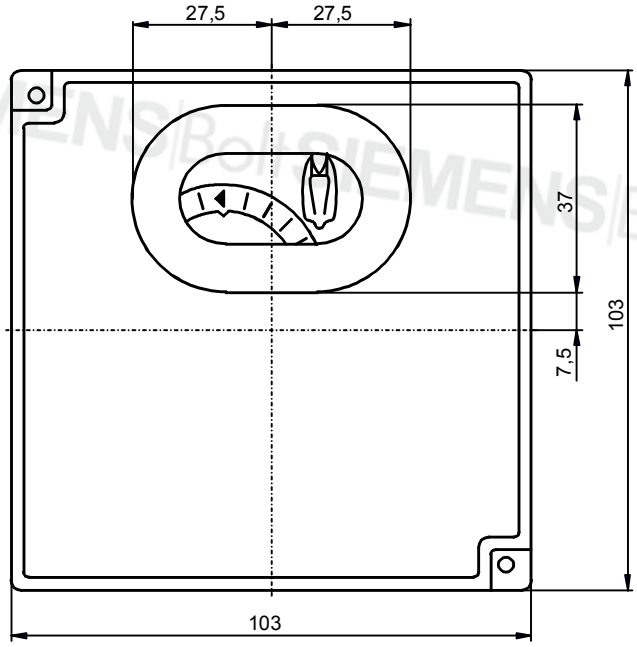

©2018 Siemens AG Building Technologies, Berliner Ring 23, D-76437 Rastatt
Subject to change!