SIEMENS

Gamma *instabus* Technical Product Information

Switching Actuators N530, 6AX
Switching Actuators N532, 10AX
Switching Actuators N534, 16/20AX

4x AC 230V
5WG1 530-1DB31
5WG1 532-1DB31
5WG1 534-1DB31

8x AC 230V
5WG1 530-1DB51
5WG1 532-1DB51
5WG1 534-1DB51

12x AC 230V
5WG1 530-1DB61
5WG1 532-1DB61
5WG1 534-1DB61

Switching Actuators N530, 6AX 4-, 8- and 12-fold AC 230V
Switching Actuators N532, 10AX 4-, 8- and 12-fold AC 230V
Switching Actuators N534, 16/20AX 4-, 8- and 12-fold AC 230V

- Switching of capacitive, inductive and resistive loads
- Maintenance free terminals for connection and through-wiring of untreated single-core, stranded or multi-core conductors, 0.5 ... 2.5mm² conductor area
- Mechanical slide switches per output for checking the installation

Functions when configured with ETS

- Comprehensive control, override and diagnostic functions per channel
- Control functions: Switching with status annunciation, logic gates, central switching, scene control, timer functions, night mode
- Override functions: Manual ON, Permanent OFF, Lock, Input monitoring
- Diagnostic functions: Counting of switching cycles and operating hours, status annunciation
- Control value input for analog values configurable as an alternative to the switching input

© Siemens AG 2017
Subject to change without further notice

Type overview

Type	Order number	Description
	5WG1 530-1DB31 5WG1 532-1DB31 5WG1 534-1DB31	Switching Actuator N530D31, 4 x AC 230 V, 6 AX (10A AC1) Switching Actuator N532D31, 4 x AC 230 V, 10AX (16A AC1) Switching Actuator N534D31, 4 x AC 230 V, 16/20AX
	5WG1 530-1DB51 5WG1 532-1DB51 5WG1 534-1DB51	Switching Actuator N530D51, 8 x AC 230 V, 6 AX (10A AC1) Switching Actuator N532D51, 8 x AC 230 V, 10AX (16A AC1) Switching Actuator N534D51, 8 x AC 230 V, 16/20AX
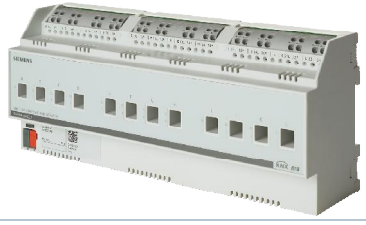	5WG1 530-1DB61 5WG1 532-1DB61 5WG1 534-1DB61	Switching Actuator N530D61, 12 x AC 230 V, 6 AX (10A AC1) Switching Actuator N532D61, 12 x AC 230 V, 10AX (16A AC1) Switching Actuator N534D61, 12 x AC 230 V, 16/20AX

Features

The Switching Actuators N530D31, N532D31 and N534D31 can switch four individual groups of electrical loads via their four potential-free outputs.

The Switching Actuators N530D51, N532D51 and N534D51 can switch eight individual groups of electrical loads via their eight potential-free outputs.

The Switching Actuators N530D61, N532D61 and N534D61 can switch twelve individual groups of electrical loads via their twelve potential-free outputs.

These devices all have the following features in common.

The device is an N-system DIN rail mounted device for mounting in distribution or control panels on 35 mm rails according to IEC 60715.
The bus connection of the device is done via the bus terminal block. The power supply of the electronics of the device is provided by the bus (i.e., it requires no additional power supply).
Each actuator output has a potential-free relay with a switching position indicator. Apart from showing the switching state (when switching manually as well as when switching via the bus) it can be used to manually change the switching position using a tool.
Each actuator output has one terminal each for mains power supply (rated contact voltage AC 230V) and for the switched load.
The maintenance-free terminals are designed for connection and through-wiring of untreated single-core, stranded or multi-core conductors, 0.5 ... 2.5mm². Stranded or multi-core conductors can be pushed into the terminals without crimping on ferrules.
The terminals each have two connection points allowing e.g. through-wiring of the mains power supply from one output to the next.
Each of the outputs (relays) can be assigned various tasks depending on the application program used, i.e. the switching actuator N 53x consists of the device (hardware) and its application programs (software).

Application

The Switching Actuators can switch resistive loads (e.g. electrical heating, incandescent lamps), inductive loads (e.g. motors, low voltage halogen lamps with magnetic transformer) or capacitive loads (e.g. low voltage halogen lamps with electronic transformer).

The devices are applicable for switching of loads with high in-rush current peaks, especially for fluorescent lamp loads (AX) according to DIN EN 60669-2-1.
The permissible lamp loads are listed in section „Technical Data“.

© Siemens AG 2017
Subject to change without further notice

Functions when commissioned with ETS

The switching actuators provide numerous control functions per actuator output.
The base function is switching with status annunciation.
Via ETS configuration the base function can be extended by control functions (logic, timers, scene control, central switching), override functions (Manual ON, Permanent OFF, blocking, forced control) up to diagnostic functions (counting of operating hours and switching cycles without or with threshold monitoring).
The following schema shows the functions in a logic order.

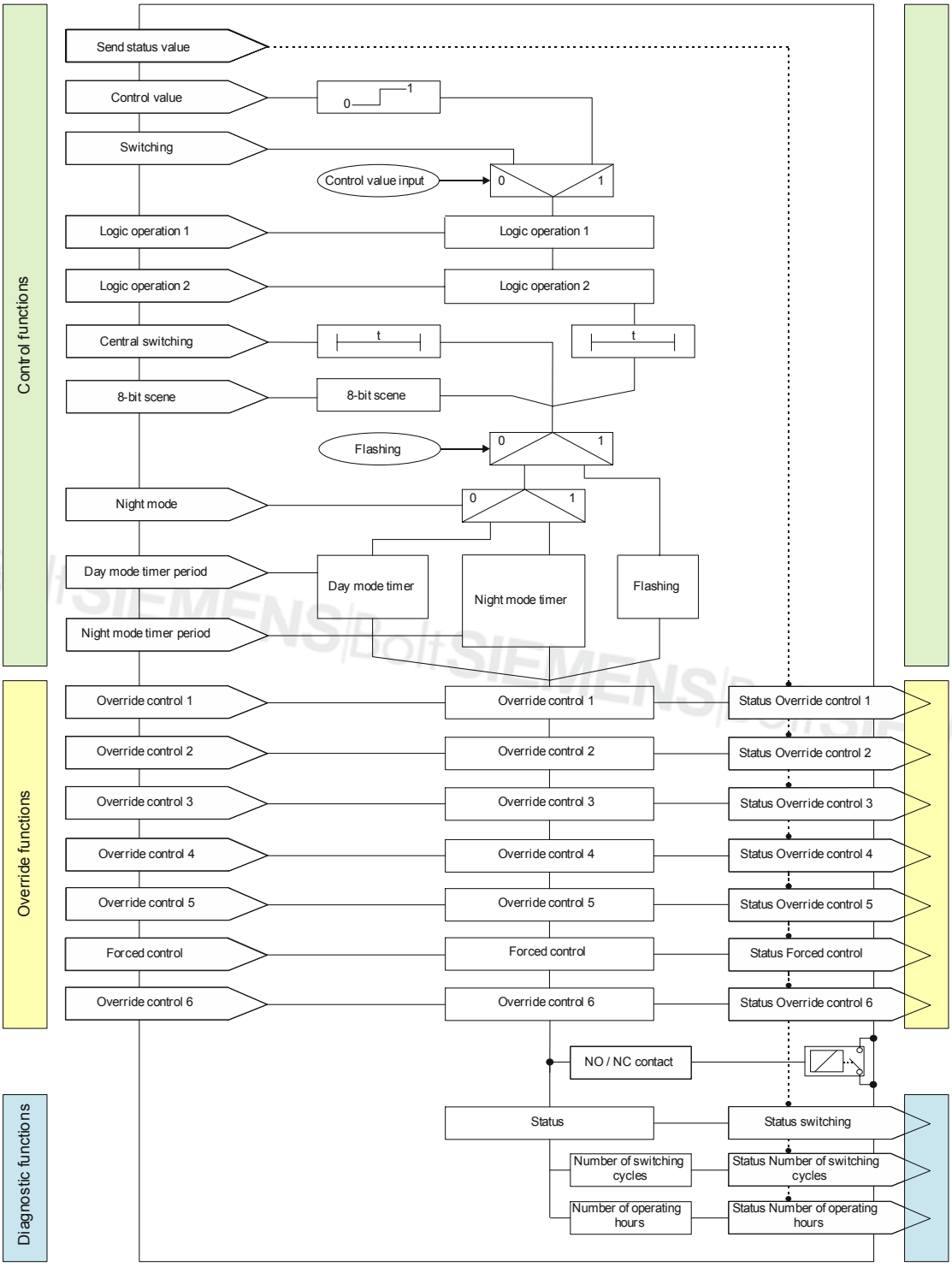

Schematic design of a switching actuator channel

Siemens AG
Building Technologies Division
Control Products and Systems
P.O. Box 10 09 53, D-93009 Regensburg

© Siemens AG 2017
Subject to change without further notice

In the following sections the range of control, override and diagnostic functions are each described.

Control functions

The new switching actuators provide automation of lighting or control of motors. The following control functions are available for this purpose:

- Switching input: control input for ON respectively OFF commands
- Control value input: A control value input with configurable thresholds for On and Off switching can be used as an alternative to a switching input. The control value input is a control input for an analog control value e.g. temperature, percent value, power, luminance and integer numbers. The control value input is transformed via an upper and a lower threshold into an ON respectively an OFF command.
- Alternatively available operating modes:
    - Normal operation
    - Timer operation
    - Flashing operation
- Logic operations (AND, OR, NAND, XOR, NOR, FILTER, TRIGGER)
- Central switching
- 8-bit scene control
- Day/night operation

Each output of the actuator can be individually set to one of these operating modes:

- Normal operation
- Timer operation
- Flashing operation

In the operation mode „normal operation" the timer functions for delayed On and Off switching and timer night mode operation are available.
In the operation mode „timer operation" the functions timer day operation and timer night operation are available.
In the operation mode „Flashing" the output is cyclically turned on and off with configurable on and off duty cycles.
In timer day or night operation switching On of the output can be time limited (e.g. for cleaning lighting), if applicable with warning before switching off via off and on switching of the output (single flashing).

Per output there is an integrated 8-bit scene control with each output assignable to up to 8 scenes.

Override functions

To realize special functions, there are override control functions, which have a higher priority than standard control functions.
Per actuator output up to six different override functions (1 to 6) can be freely selected. The override control function 6 has the highest priority, the override function 1 the lowest. With the switching actuators, the forced control function always has second highest priority between the override functions with priority 5 and 6. For each one of the activated override functions one of the following functions can be chosen:

- manual override ON
- permanent OFF
- blocking function
- central override
- user-defined override function

For each actuator output this allows for flexible configuration of different priority dependent overrides.
For the override functions a control value input can be used instead of a switching input.
Override functions can be used to address special cases in room and building control like alarm or maintenance work.

Diagnostic functions

The diagnostic functions support supervisory systems with their display, monitoring and archiving functions. For this purpose these diagnostic functions are available:

- Device function: The switching actuator cyclically sends a function signal allowing a supervisory system to monitor its function.

© Siemens AG 2017
Subject to change without further notice

- Status indication: Sending of the switching status can be activated per output. The current status can be read via the bus or transmitted cyclically.
- Status retrieval: For all outputs sending the current status can triggered via a central status retrieval object. With a single message visualization (e.g. IP Control Center) can update its status information and display.
- Switching cycle counting with or without threshold monitoring: Counting of switching cycles can be activated per output. The number of switching cycles can be read via the bus. This allows for monitoring of the switching cycles and a switching cycle dependent maintenance. If the threshold monitoring is activated the device sends a signal onto the bus when the set threshold is reached. The exceedance of the threshold is automatically signaled respectively this can be sent as an email by the IP Control Center or can be displayed by a warning light.
- Operating hour counting with or without threshold monitoring: Counting of operating hours can be activated per output. The number of operating hours can be read via the bus. This allows for monitoring of the operating hours and an operating hour dependent maintenance, e.g. if after 10,000 hours of operation lamps shall be replaced. If the threshold monitoring is activated the device sends a signal onto the bus when the set threshold is reached. The exceedance of the threshold is automatically signaled respectively this can be sent as an email by the IP Control Center or can be displayed by a warning light.

ETS version

The application program already has been loaded in the factory.
The device is configured and commissioned with Engineering Tool Software (ETS) version ETS v4 or higher.
With the ETS (Engineering Tool Software) the specific parameters and addresses are assigned appropriately, and downloaded into the device.
The device supports functions of ETS5 like fast downloading of the application program and further ETS5 configuration options.

Behavior on bus voltage failure/recovery

Because the device electronics are powered by bus voltage a mains power failure only leads to a functional failure of the actuator if the bus voltage fails due to a failure of the mains voltage.
For each actuator output the switching position of the relay on bus voltage failure can be individually configured to be Off, On, or with No change.
On bus voltage failure the current switching status value and further values of each output are saved permanently for restoration on bus voltage recovery.
On bus voltage recovery, the starting value of the switching object can be set to Off, On, last switching status or last received value.
On bus voltage recovery the configured actions are executed and, if applicable, new status values are reported.

Building site function

The building site function provided ex-factory enables switching the building site lighting on and off via bus wall switches and actuators, even if these devices have not yet been commissioned with ETS.

Factory default state

In the default factory state all channels (outputs) are set to the function “switching” for the building site function.

Behavior on unloading the application program

When the application program is unloaded with ETS the device does not function.

Resetting the device to factory default settings

A very long push of the programming button (> 20 s) effects a reset to factory settings. This is indicated by constant flashing for 8 seconds.
All configuration settings are lost. The building site function is re-activated.

Siemens AG
Building Technologies Division
Control Products and Systems
P.O. Box 10 09 53, D-93009 Regensburg

© Siemens AG 2017
Subject to change without further notice

Addressing mode

A short push of learning button (< 2 s) enables the addressing mode. This is indicated by a continuously lit programming mode LED. A second push disables this mode.

Note

If the bus voltage is applied while the learning button is pressed, then the application in the device does not start.
The application starts again, if the device is reset with ETS or if the bus voltage is reapplied without pressing the learning button.

Technical design

Location and Function of the Display and Operating Elements, Interfaces

A1 Maintenance-free terminals for connection of load circuits

A2 Test contacts for voltage measuring

A3 Slide switch for display of the switching status and for manual operation
- slide switch up: Relay contact opened
- slide switch down: Relay contact closed

A4 Learning button for switching between normal operating mode and addressing mode and for receiving the physical address.
With integrated LED for indicating normal operating mode (LED off) or addressing mode (LED on); returns to normal operating mode automatically after receiving the physical address.

A5 Bus connection block, screw-less

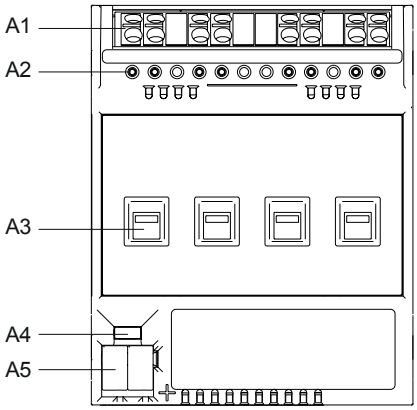

Technical data

Power supply	
KNX bus voltage	DC 24V (DC 21...30V)
KNX bus current	typ. 8mA (w/o switching), max. 20mA
KNX power dissipation	< 0.25W (KNX connection)

Outputs	
Rated voltage	AC 230/400V, 50/60 Hz
Rated current per output • N530	• 6AX (70µF)
• N532	• 10AX (140 µF)
• N534	• 16AX (200 µF) • 20AX (200 µF) up to 35°C ambient temperature and adjacent outputs with no current

Physical specifications	
Housing	Plastic
Dimensions	DIN rail mounted device in N-design • width 4 MU (N53xD31), 8 MU (N53xD51), 12 MU (N53xD61) (1 MU = 18 mm) • length 90 mm • height 61 mm
Installation	Top hat rail according to IEC 60715-TH35
Weight	N530D31 ca. 235 g N530D51 ca. 430 g

© Siemens AG 2017
Subject to change without further notice

Physical specifications		
	N530D61 N532D31 N532D51 N532D61 N534D31 N534D51 N534D61	ca. 630 g ca. 235 g ca. 430 g ca. 630 g ca. 280 g ca. 525 g ca. 775 g
Fire Load	N530D31 N530D51 N530D61 N532D31 N532D51 N532D61 N534D31 N534D51 N534D61	ca. 5 MJ ca. 8 MJ ca. 12 MJ ca. 5 MJ ca. 8 MJ ca. 12 MJ ca. 6 MJ ca. 10 MJ ca. 14 MJ

Environmental conditions	
Ambient operating temperature	-5 °C ... +45 °C
Storage temperature	-20 °C ... +70 °C
Transport temperature	-25 °C ... +70 °C
Relative humidity (non-condensing)	5 % ... 95 %
Climatic conditions	EN 50428

Environment and safety regulations	
Protection type (in accordance with EN 60529)	IP20 IP 20C in the operable area according to IEC 61439-3
Protection class (according to DIN EN 61140)	II
Degree of pollution (according to IEC 60664-1)	2
Overvoltage category (according to IEC 60664-1)	III
Electrical safety • Bus • Device complies with • EMC-requirements	 • Safety Extra Low Voltage SELV DC 24 V • EN 50428 • EN 50428
Markings	KNX EIB
CE mark	Complies with the EMC regulations (residential and functional buildings), low voltage regulations, and RoHS Directive

Reliability	
Failure rate (at 40°C)	• N530D31 378 fit • N530D51 598 ft • N530D61 820 fit • N532D31 378 fit • N532D51 598 fit • N532D61 820 fit • N534D31 377 fit • N534D51 597 fit • N534D61 819 fit

© Siemens AG 2017
Subject to change without further notice

Type	N 530D31 N 530D51 N 530D61			N 532D31 N 532D51 N 532D61			N 534D31 N 534D51 N 534D61		
Contact current									
Rated current, AC [A]	6AX			10AX			16/20AX		
AC3-operation (cos φ = 0,45) [VA]	1380			2500			3680		
Maximum peak switch-on current • t = 150µs [A] • t = 250µs [A] • t = 600µs [A]	 400 320 200			 400 320 200			 600 480 300		
Contact voltage									
Rated voltage, AC [V]	230			230			230		
Service life									
Mechanical service life, Switching cycles in millions	1			1			1		
Electrical service life, Switching cycles in millions	1)			1)			1)		
Power loss									
Maximum power loss per device at rated power [W]	4	8	12	4	8	12	4 2)	8 2)	12 2)
Switching capacities/load types, loads									
Resistive load [W]	2300			2500			3680		
Minimum switching capacity [V/mA]	12/100			12/100			12/100		
DC switching capacity [V/A]	24/10			24/10			24/10		
Maximum capacitive load[µF]	70			140			200		
Incandescent lamps									
Incandescent lamps [W]	2300			2500			3680		
Halogen lamps 230 V [W]	2300			2500			3680		
LV halogen lamp with conventional transformer (inductive) [VA]	500			500			2000		
T5/T8 fluorescent lamps									
Uncorrected [VA]	1380			2300			3680		
Parallel corrected (at max. possible C) [W]	1300			1300			2500		
DUO-circuit [VA]	1380			2300			3680		
Compact fluorescent lamps									
Uncorrected [VA]	1380			1600			3680		
Parallel corrected (at max. possible C) [W]	1100			1100			3000		

1) on request
2) at 16A

© Siemens AG 2017
Subject to change without further notice

Notes

The notes apply to all Switching Actuators N53x.

Installation notes

The device may be used for permanent interior installations in dry locations within distribution boards or small casings with DIN rail EN 60715-TH35.

Safety

	DANGER • The device must be mounted and commissioned by an authorized electrician. • A safety disconnection of the device must be possible. • The device must not be opened. • For planning and construction of electric installations, the relevant guidelines, regulations and • Standards of the respective country are to be considered.

Manual operation of the slider switches

Manual operation of the slider switches is intended only for emergency operation or for testing during installation. No telegram is sent onto this bus and the changed switching position is not detected by the device. On bus voltage failure/recovery a manually switched relay is also set to the configured switching state.

Assembly

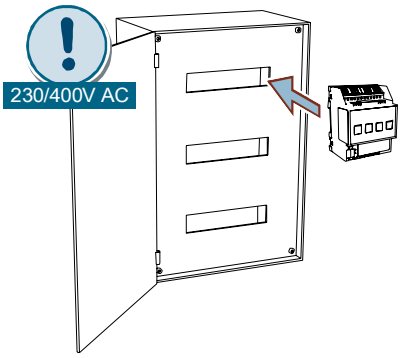

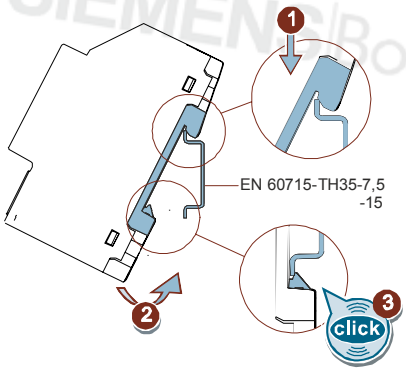

Removal

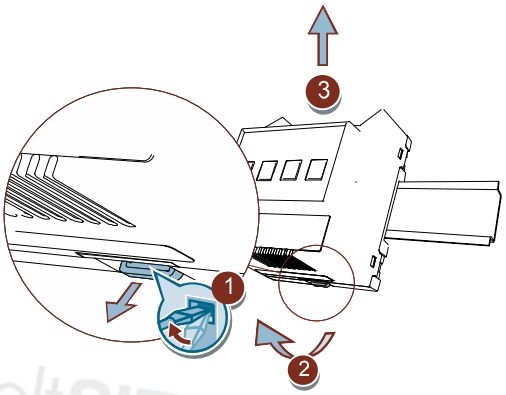

Siemens AG
Building Technologies Division
Control Products and Systems
P.O. Box 10 09 53, D-93009 Regensburg

© Siemens AG 2017
Subject to change without further notice

Connection

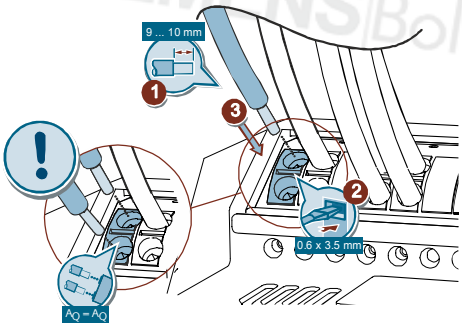

Cu	Aq	
	0.5 ... 2.5 mm²	9 ... 10 mm
	2.5 mm²	9 ... 10 mm

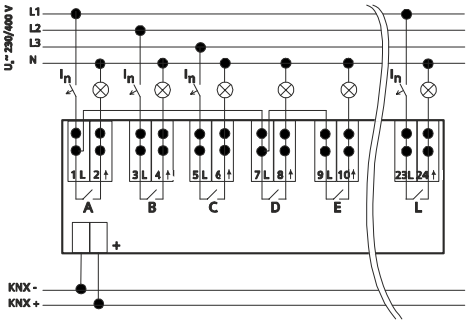

MLFB	Type / I_n
5WG1 530-1DB31 5WG1 530-1DB51 5WG1 530-1DB61	B / 16 A
5WG1 532-1DB31 5WG1 532-1DB51 5WG1 532-1DB61	B / 16 A
5WG1 534-1DB31 5WG1 534-1DB51 5WG1 534-1DB61	B / 16 A B / 20 A

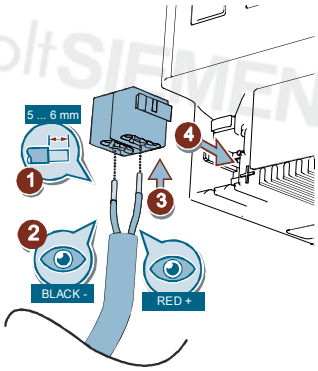

Cu		
	0.6 ... 0.8 mm	5 ... 6 mm

Disconnection

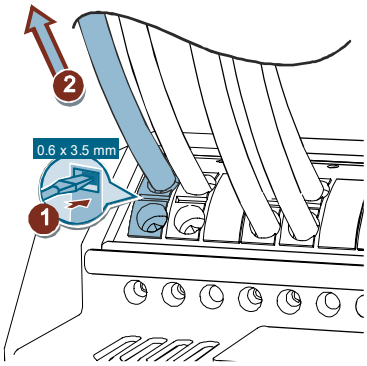

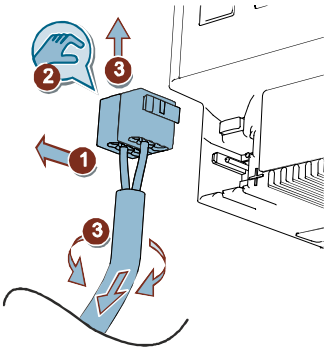

© Siemens AG 2017
Subject to change without further notice
Siemens AG
Building Technologies Division
Control Products and Systems
P.O. Box 10 09 53, D-93009 Regensburg

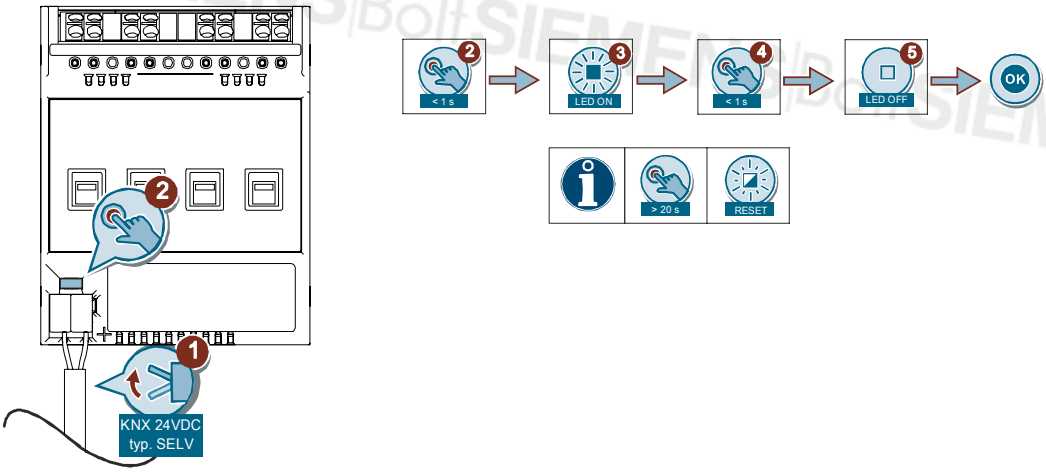

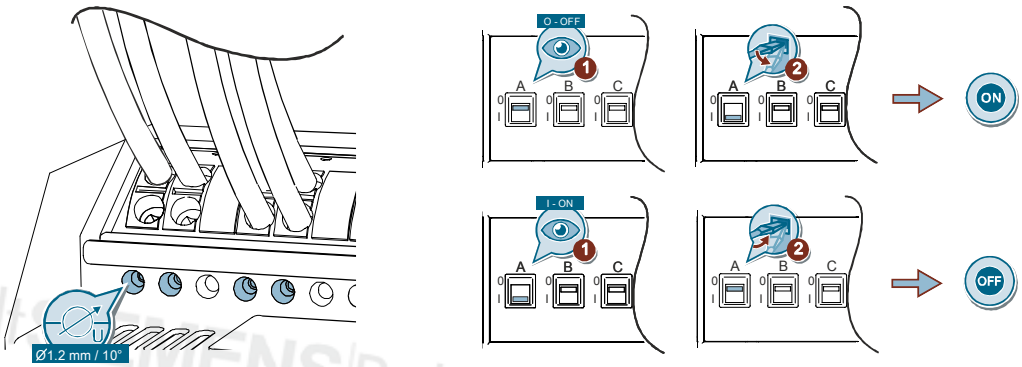

Dimension Drawing

Dimensions in mm

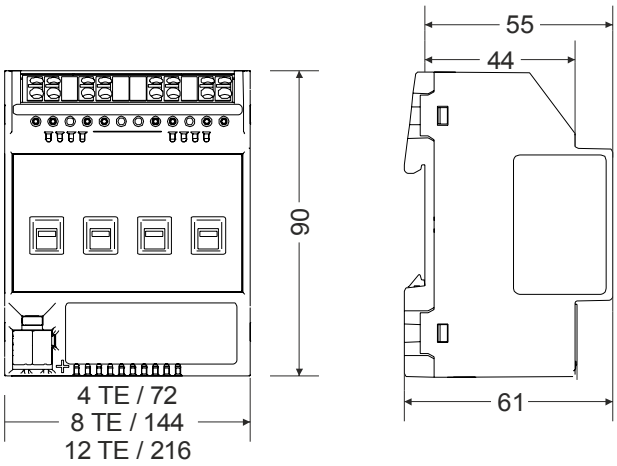

Product documentation

Related documents like operation/installation instructions, application program description, product data base entry, additional software, product picture, CE declaration, et. Al. Can be found via this Internet address:

http://www.siemens.com/gamma-td

Siemens AG
Building Technologies Division
Control Products and Systems
P.O. Box 10 09 53, D-93009 Regensburg

© Siemens AG 2017
Subject to change without further notice

Support

General Notes

- The operating instructions must be handed over to the client.
- A faulty device shall be returned with a Return Good Note for Service provided by the appropriate Siemens sales office.
- If you have further questions concerning the product please contact our technical support.

☏ +49 (911) 895-7222
🖷 +49 (911) 895-7223
✉ support.automation@siemens.com

http://www.siemens.com/automation/support-request

Published by
Siemens AG
Building Technologies Division
Control Products and Systems
P. O. 10 09 53, D-93009 Regensburg

© 2017 Copyright Siemens AG

Subject to change without further notice

Update: http://www.siemens.com/gamma-td